JASD Series AC Servo Drives

JASD15002-20B, JASD20002-20B, JASD30002-20B

User's Manual

Phone： +86-023-68438829

Email:support@oyostepper.com

https://www.oyostepper.com

Contents

Preamble ---------- 1
Contents ---------- 2
Chapter 1 Safety Precautions ---------- 6
1.1 Precautions for reception and installation ---------- 6
1.2 Precautions for Wirings ---------- 6
1.3 Precautions for operation ---------- 7
1.4 Precautions for maintenance and inspection ---------- 8
Chapter 2 Product Introduction ---------- 9
2.1 Servo Driver ---------- 9
2.1.1 Introduction ---------- 9
2.1.2 Main characteristics ---------- 9
2.1.3 Driver Specifications ---------- 10
2.1.4 Servo driver model description and nameplate content 13
2.2 Servo motor ---------- 14
2.2.1 Introduction ---------- 14
2.2.2 Main features ---------- 14
2.2.3 Servo motor model description and nameplate content 15
2.3 Servo control system and Main power circuit connection ---------- 17
2.3.1 Wiring diagram of servo control system ---------- 17
2.3.2 loop-connectivity main power ---------- 18
Chapter 3 Port usage and cabling ---------- 19
3.1 Distribution of ports in Servo-drive ---------- 19
3.2 Description of servo driver CN1 control port ---------- 20
3.2.1 Definition of CN1 control port ---------- 20
3.2.2 Connection instructions for CN1 control ports ---------- 22
3.3 Description of the CN2 encoder port of the driver ---------- 24
3.3.1 Description of SCSI-20P encoder connector ---------- 24

3.3.2 Description of 1394-6P encoder connector ---------- 25
3.4 Description of the driver's CN3/CN4 port ---------- 26
3.5 Description of the driver's CN5 port ---------- 27
3.6 Port description of power supply and motor power line ------- 27
Chapter 4 Installation instructions ---------- 29
4.1 Installation dimension ---------- 29
AC servo driver with 2kW power（unit：mm） ---------- 31
AC servo driver with 3KW power（nuit：mm） ---------- 32
4.2 Install the environment used ---------- 33
Chapter 5 Panel displays instructions and Settings ---------- 34
5.1 The instructions of the panel functions ---------- 34
5.2 Operation mode switching process ---------- 35
5.3 Status display ---------- 36
5.4 Write and save method for parameter setting ---------- 37
Chapter 6 control mode and setting ---------- 38
6.1 Position control ---------- 38
6.1.1 Position control wiring diagram ---------- 38
6.1.2 Position control wiring diagram ---------- 39
6.1.3 Description of position control mode parameters ------ 40
6.1.4 Example of electronic gear ratio calculation ---------- 41
6.2 speed control ---------- 43
6.2.1 Speed control wiring diagram ---------- 44
6.2.2 Description of speed control mode parameters --------- 45
6.3 torque control ---------- 46
6.3.1 Torque control wiring diagram ---------- 46
6.3.2 Description of torque control mode parameters -------- 47
Chapter 7 trial operation and parameter adjustment ---------- 49
7.1 test run ---------- 49

7.1.1 Pre operation detection ---------- 49
7.1.2 No-load test run ---------- 50
7.2 parameter adjustment ---------- 52
7.3 Gain tuning manually ---------- 54
7.3.1 Basic parameter ---------- 54
7.3.2 Gain switching ---------- 58
7.3.3 Feed-forward function ---------- 59
7.3.4 Disturbance observer ---------- 60
7.3.5 Resonance suppression ---------- 61
Chapter 8 Parameter and Function ---------- 66
8.1 Parameter list ---------- 66
8.2 Parameter Description ---------- 81
8.2.1 P00-XX motor and driver parameter ---------- 81
8.2.2 P01-xx Major control parameter ---------- 84
8.2.3 P02-xx Gain assorted parameter ---------- 87
8.2.4 P03-xx Position parameters ---------- 93
8.2.5 P04-xx Speed parameter ---------- 96
8.2.6 P05-xx Torque parameter ---------- 98
8.2.7 P06-xx I/O Parameter ---------- 100
8.2.8 P08-xx High function Parameter ---------- 104
8.3 List of surveillance items ---------- 107
8.4 Auxiliary function ---------- 109
Chapter 9 Fault Analysis and Treatment ---------- 113
9.1 Failure alarm information list ---------- 113
9.2 Cause and treatment of fault alarm ---------- 115
Chapter 10 Communication Settings ---------- 123
10.1 Modbus communication parameter setting ---------- 123
10.2 Modbus communication support read and write parameter 124

settings---------- 124
Chapter 11 Special Function Instructions ---------- 127
11.1 Absolute encoder is used ---------- 127
11.1.1 Functional description ---------- 127
11.1.2 Based on MODBUS communication servo basic Settings and instructions. ---------- 127
11.1.3 Based on MODBUS communication absolute data address ---------- 128
11.1.4 Absolute encoder related alarm processing-------- 128
11.1.5 Absolute encoder battery replacement ---------- 129

Chapter 1 Safety Precautions

The following explanations are for things that must be observed in order to prevent harm to people and damage to property.

Misuses that could result in harm or damage are shown as follows, classified according to the degree of potential harm or damage.

Danger	Indicates great possibility of death or serious injury.
Caution	Indicates the possibility of injury or property damage.
	Indicates something that must not be done.

1.1 Precautions for reception and installation

Danger：1、Please match the driver and motor according to the specified way, otherwise it will cause equipment damage or fire.

2、It is forbidden to use in places with serious water vapor, combustible gas, corrosive gas, etc. Otherwise it will cause electric shock, personal injury, fire and equipment damage.

1.2 Precautions for Wirings

Danger：1、Please do not connect the drive power supply to the motor output terminals (U, V, W). Otherwise, the driver will be damaged, which may cause personal injury or fire.

2、Please make sure that the connecting wires of power supply and motor output terminals are locked, otherwise it may cause sparking and fire.

3、Please properly select the power cord and motor power extension cord correctly to avoid fire caused by insufficient current bearing capacity of the wire.

4、Please make sure that ground the earth terminal of the motor and driver shell without fail.Bad grounding may cause electric shock.

Caution：1、Please do not tie the motor power line to the signal line or pass through the same pipe to prevent interference to the signal.

2、Please use multi-stranded wire with shielding for signal line and encoder feedback extension line to enhance anti-interference ability.

3、After the driver is off power, there is still high voltage inside. Please do not touch the power terminal for 5 minutes, and make sure the discharge indicator is off before operating.

4、Before power on, please make sure that the wiring is connected correctly.

1.3 Precautions for operation

Danger：1、Before installation of the equipment, please first no-load trial run to avoid accidents.

2、Do not allow untrained personnel to operate, to prevent equipment damage and personnel injury caused by the wrong operation.

3、During normal operation, please do not touch the radiator and its interior of the driver with your hands to prevent high temperature scalding or electric shock.

Caution：1、Please adjust the parameters of the driver before long-term test to prevent the poor use of the driver and equipment.

2、Please make sure that the device start, emergency stop, close and other switches are effective before running the device.

3、Please do not turn on and off the power repeatedly.

1.4 Precautions for maintenance and inspection

：1、It is forbidden to touch the inside of the drive or motor during operation to avoid electric shock.

2、 Within 5 minutes after the power is turned off, do not touch the power supply and power terminal to prevent electric shock.

3、 Do not change the connection line when the power is on, in case of electric shock or injury.

4、 Must be operated and maintained by trained professionals.

5、 Do not disassemble and repair except by our staff.

Chapter 2 Product Introduction

2.1 Servo Driver

2.1.1 Introduction

JASD series universal servo driver is a high performance AC servo unit developed by JMC.The servo driver of this series use advanced DSP chip for motor control, large-scale Field Programmable Gate Array (FPGA) and IPM power module, which is characterized by small size, high integration, stable performance and reliable protection. There are abundant digital and analog I/O interfaces. It can be used with a variety of upper computer devices, and support MODBUS communication protocol to facilitate networking. It can realize the full digital control of position, speed and torque precision through the optimized PID control algorithm. It has the advantages of high precision and quick response. At the same time, the driver supports 2500 line incremental encoder and 17-bit and 20-bit high precision absolute encoder motor, to meet different customer performance requirements. Products are widely used in CNC machine tools, printing and packaging machinery, textile machinery, robots, automatic production lines and other automation fields.

2.1.2 Main characteristics

1. Using DSP+FPGA dual chip platform and optimized current loop design, the driver has the characteristics of high dynamic response, extremely short setting time, smooth operation and small vibration when stopping.
2. With automatic gain adjustment module, the user can choose the rigidity level according to the demand.
3. The built-in FIR filter and the multiple sets of notch filter, can automatically recognize and suppress the mechanical vibration.
4. The built-in disturbance torque observer, makes the drive with a strong ability to resist external disturbance.
5. There are a variety of control modes to choose, position control, velocity control, torque control, can switch various control modes.
6. Location input pulse frequency up to 4 MHZ, support pulse + direction, orthogonal pulse, double pulse position command a variety of ways.
7. It has RS485 interface, supporting Modbus communication, and Multi-ring absolute encoder with memory function. It can be flexibly applied to manipulator and other industries.

8. Programmable 8-way input and 5-way output port available, users can define input, output requirements via settings, flexible application.
9. Support incremental encoder and 17bits, 20bits, 23bits high precision absolute encoder.
10. Complete protection functions including overvoltage, undervoltage, overspeeding, overloading, Position deviation too large, encoder errors, etc. And it can remember 8 groups of historical fault information.
11. Rich monitoring items, users can choose wanted items to test running state.
12. Drive communicates with PC via connecting RS232 port to have easy, quick debug servo drive system.

2.1.3 Driver Specifications

1、Electrical specifications

a）Single phase 220V servo drive

Model JASD***2-20B	200	400	750	1500
Single Phase Continuous Input Current (Arms)	1.9	3.2	6.7	8.8
Continuous Output Current(Arms)	2.1	2.8	5.5	8
Max Output Current(Arms)	5.8	9.6	16.9	19
Main Circuit Power Supply	Single phase AC180-240V，50/60Hz			
Control Circuit Power Supply	Single phase AC180-240V，50/60Hz			
Brake Handling Function	External brake resistance		Built in brake resistance	

b）3-phase 220V servo drive

Model JASD***2-20B	750	1500	2000	3000
3-Phase Continuous Input Current (Arms)	3.6	6	8.7	11
Continuous Output	5.5	8	14	20

Current(Arms)				
Max Output Current(Arms)	16.9	19	33	50
Main Circuit Power Supply	3-phase AC180-240V，50/60Hz			
Control Circuit Power Supply	Single phase AC180-240V，50/60Hz			
Brake Handling Function	Built in brake resistance			

2、Basic Specifications

Project		Description
Control method		Single/3-phase full-wave rectifier IGBT PWM sinusoidal wave current drive
Feedback		Incremental encoder Absolute encoder
Environment	temperature	Work：0～55℃ Storage：-25～85℃
	humidity	Work：10%～90%
	altitude	<1000m.When it is higher than 1000m, it shall be derated according to GB/T 3859.2-93
	protection level	Protection level：IP10，cleanliness：2 Non-corrosive and non-combustible gas No oil and water splash Environment with less dust, salt and metal powder
Function	speed regulate area	1:5000
	steady speed accuracy	±0.01%：External load fluctuation 0～100% ±0.01%：power input change ±10%（220V） ±0.1%：ambient temperature ±25℃（25℃）
	velocity response frequency	1200Hz
	torque control accuracy	±2%

Input/Output signal	frequency-dividing pulse output of encoder	A phase, B phase and C phase: linear driving output. frequency-dividing pulse output number: can be set at will.
	input signal	point：8 Function：Servo ON、Erase warning the warning、Forward overpass signal input、Reverse overpass signal input、Control mode switching、P action instruction input、Positive side external torque limit、Reverse side external torque limit、Gain switching input、Zero position fixed input、Instruction pulse inhibit input、Encoder absolute value data required input、1. Internal set speed switching input 2. Internal set speed switching input3、Position instruction clear input、Check out input of magnetic pole、Switch input of instruction pulse input multiplier
	output signal	point：5 Function：Alarm output、Band-type brake open output、Servo ready for output、Position complete output、Position close output、Uniform speed output、Motor zero speed output、Torque limit detection output、Speed limit detection output、Warning output、instruction pulse input multiplier switching output
Display function		High voltage power indicator lamp, 6-digit 8-segment LED.
Communication function	RS485	MODBUS protocol is supported. Axis address: by parameter setting
	RS232	Connect PC for debugging
Regeneration treatment		Built-in regenerative resistor or external regenerative resistor.
Protection function		Overvoltage, undervoltage, overcurrent, overload, etc.

2.1.4 Servo driver model description and nameplate content

1、Model description：

JASD 750 2 - 20B - X X

JMC JASM series AC servo drivers

Driver power	
Symbol	Rated power output
200	200W
400	400W
750	750W
1500	1500W
2000	2000W
3000	3000W

Power supply	
Symbol	Specifications
1	Single phase 220V
2	Single/3-phase 220V

Special function module：
Special function module The default is the standard model.

Number of encoder lines	
Symbol	Supported encoder
2500	2500line
20B	17B/20B/M23B
M20B	M23B with memory

2、Nameplate content description

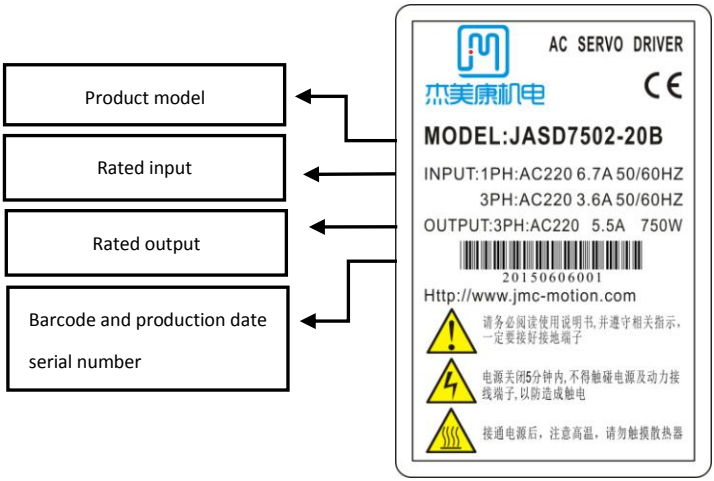

2.2 Servo motor

2.2.1 Introduction

JASM servo motors are high rotational speed, high precision servo motors developed by JMC to meet the requirements of modern automatic control. This series of servo motors can make the control speed and position accuracy very accurate, and can convert the voltage signal into torque and speed to drive the control object. This series of servo motor rotor speed is controlled by the input signal and can respond quickly. It in the automatic control system, is used as actuators, and the advantages of small electrical and mechanical time constant, high linearity, initiating character such as voltage, can convert the received electrical signal to the motor shaft angular displacement or angular velocity on output, and can be adjusted real time feedback signal to the servo drive, realize high precision control.

2.2.2 Main features

1. High-energy magnetic.
2. 300% overload capacity for short periods of time.

3. Flange dimensions (mm)：40、60、80、110、130
4. Power: 0.1-3KW optional
5. Low noise, low heat, high precision, high rotation speed, etc.

2.2.3 Servo motor model description and nameplate content

1、Model description：

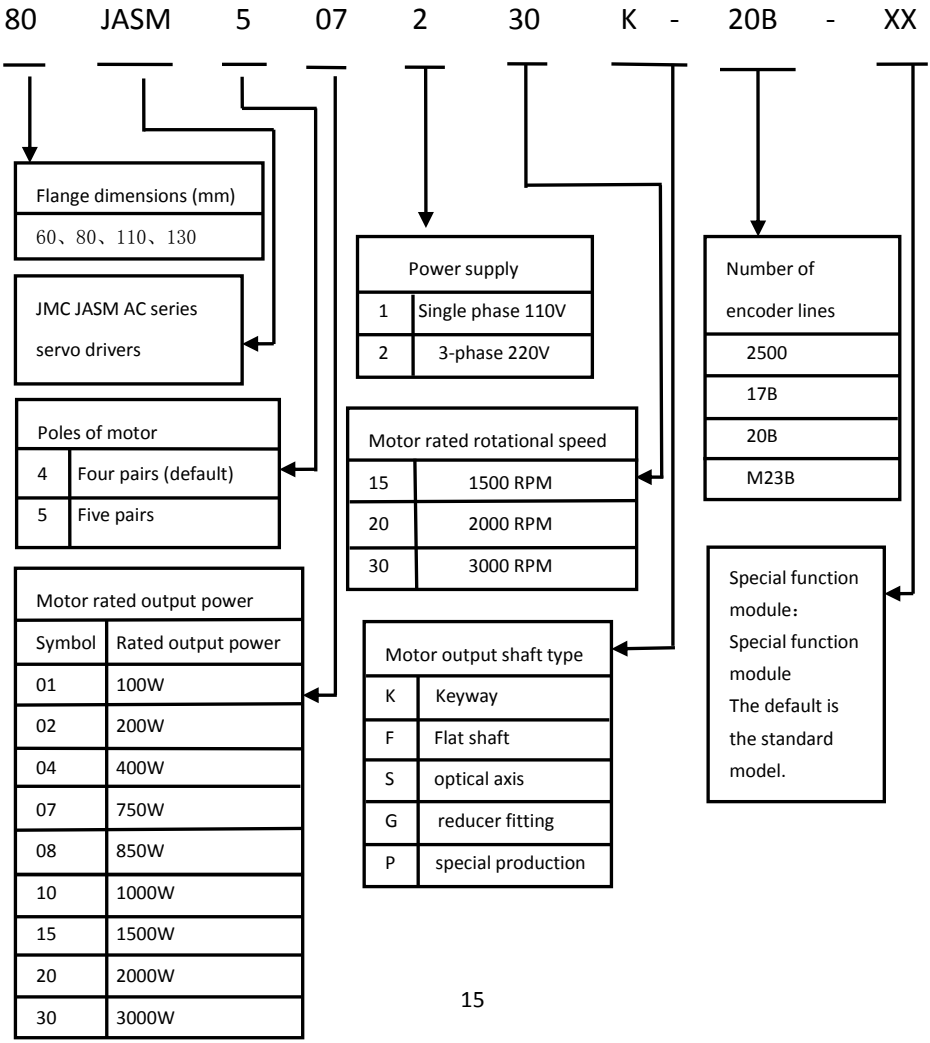

2、Nameplate content description

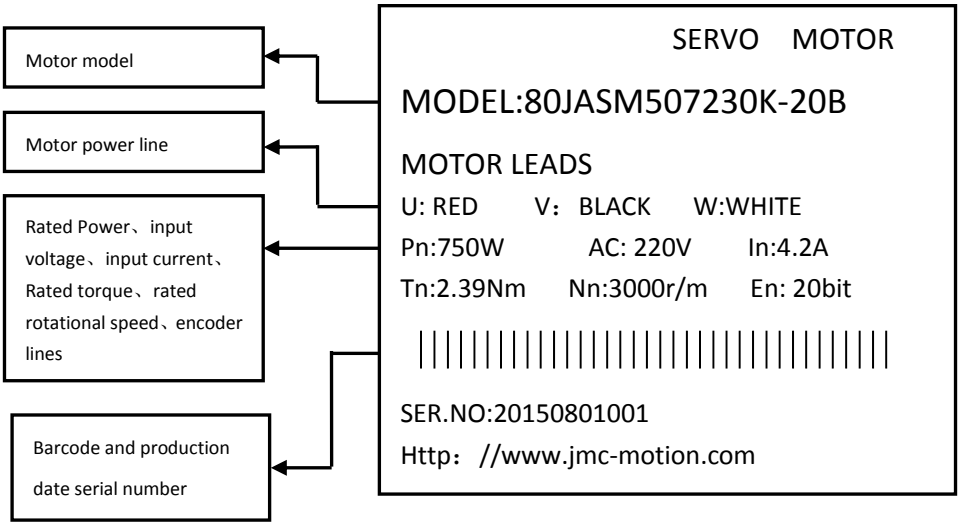

2. 3 Servo control system and Main power circuit connection

2.3.1 Wiring diagram of servo control system

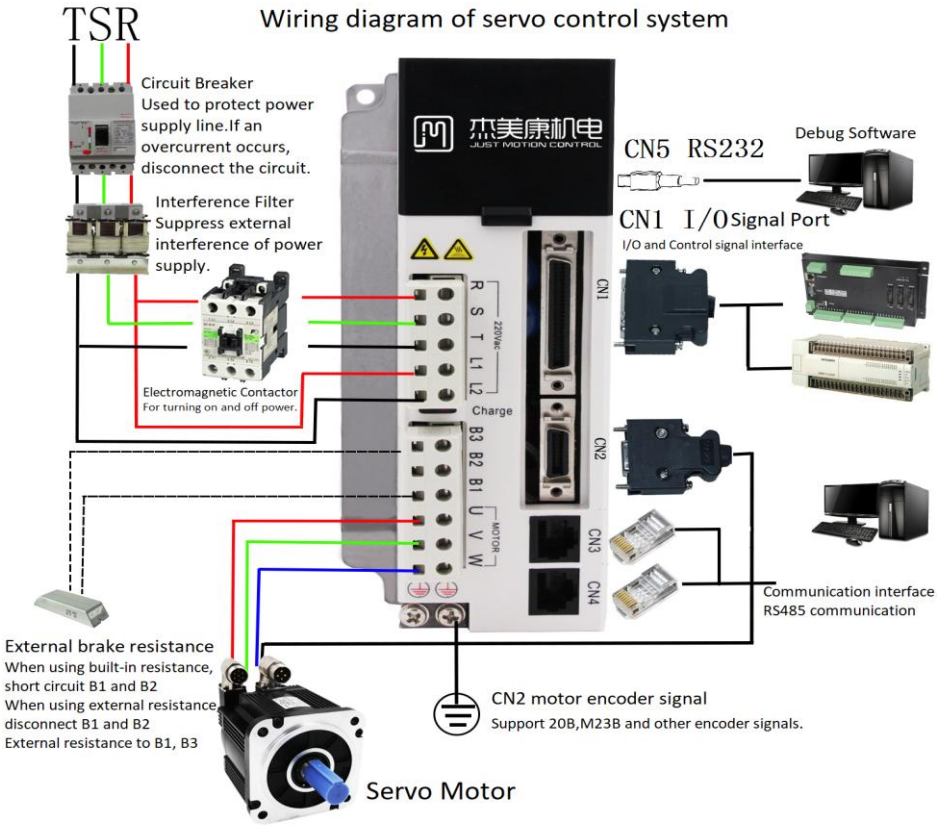

The servo driver is directly connected to the industrial power supply, without the use of transformers and other power source isolation. In order to prevent cross electric shock accident of servo system, please use fuse or circuit breaker for wiring on input power supply. Because the servo driver has no built-in grounding protection circuit, in order to form a more secure system, please use a leakage circuit breaker with overload and short circuit protection or a dedicated leakage circuit breaker with supporting ground wire protection.

2.3.2 loop-connectivity main power

1、single-phase power supply

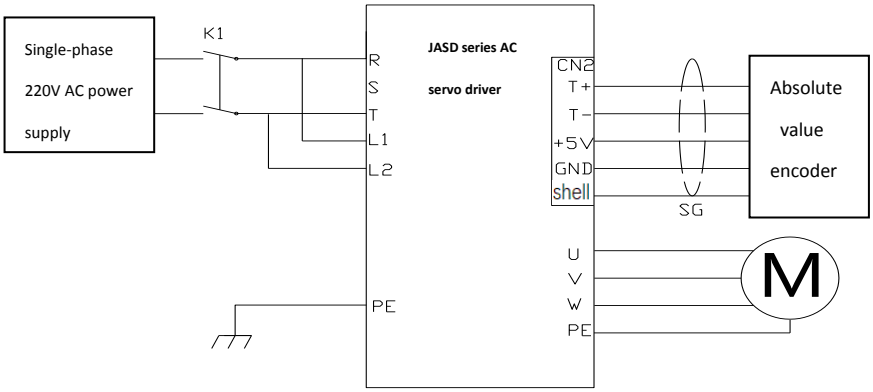

2、Three-phase power supply

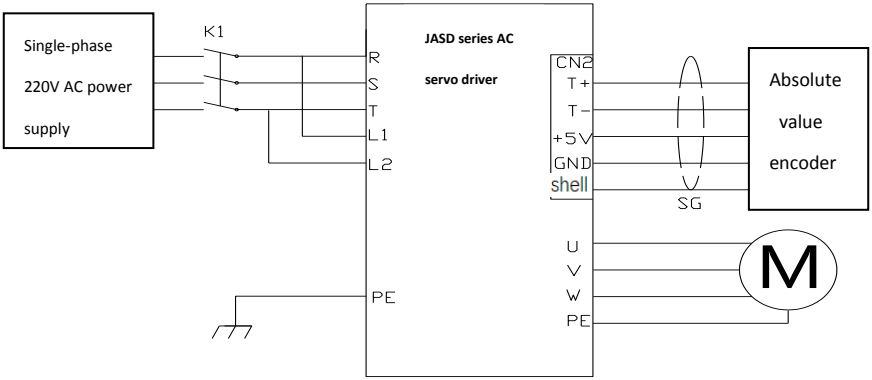

Chapter 3 Port usage and cabling

3.1 Distribution of ports in Servo-drive

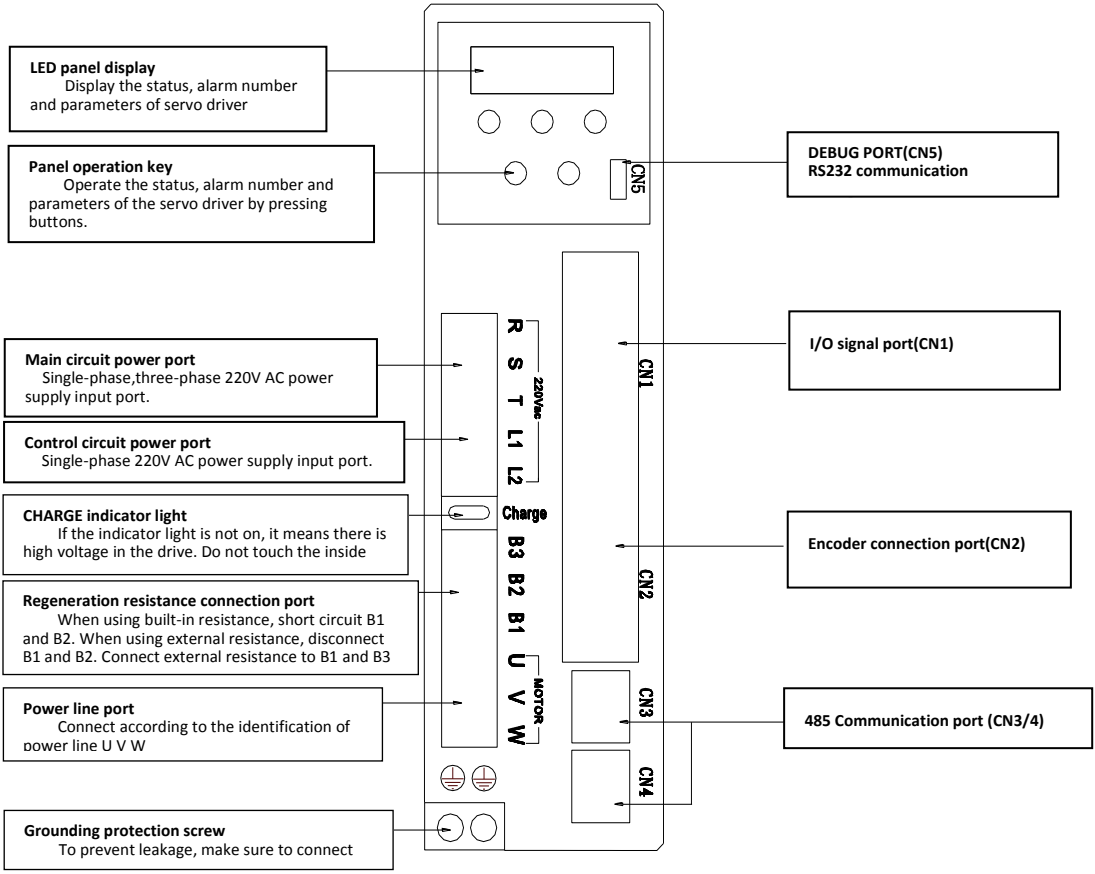

3.2 Description of servo driver CN1 control port

3.2.1 Definition of CN1 control port

The upper control and interface of drive, It has the function of the upper computer to control the driver and the feedback output of the drive.

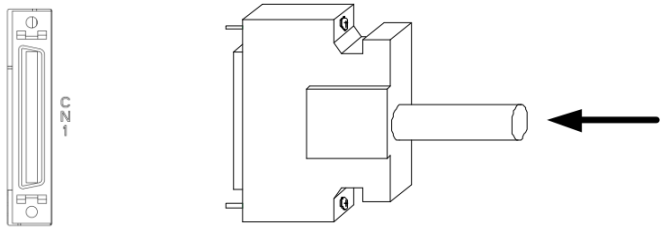

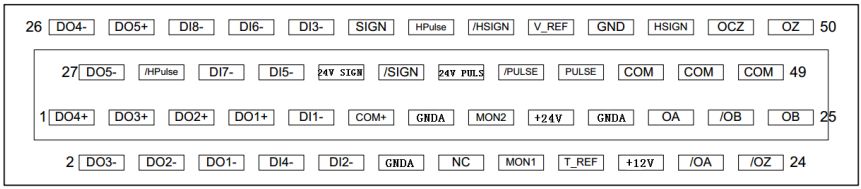

Definition of pins in CN1 terminal:

Pin number	Label	Definition	Declaration
1	DO4+	Digital output +	Customize output port
2	DO3-	Digital output -	Customize output port
3	DO3+	Digital output +	Customize output port 口
4	DO2-	Digital output -	Customize output port
5	DO2+	Digital output +	Customize output port
6	DO1-	Digital output -	Customize output port
7	DO1+	Digital output +	Customize output port
8	DI4-	Digital input -	Customize input port
9	DI1-	Digital input -	Customize input port
10	DI2-	Digital input -	Customize input port
11	COM+	Common input	Active High 24V

12	GNDA	Emulation GND	
13	GNDA	Emulation GND	
14	NC	nop	
15	MON2	Analog data monitoring output 2	not currently supported
16	MON1	Analog data monitoring output 1	not currently supported
17	+24V	+24V output（outside I/O）	Maximum allowable output current：150mA
18	T_REF	Torque analog control +	
19	GNDA	Emulation GND	
20	+12V	+12V output（simulate command）	Maximum allowable output current：50 mA
21	OA+	Encoder A positive output	
22	OA-	Encoder A negative output	
23	OB-	Encoder B negative output	
24	OZ-	Encoder Z negative output	
25	OB+	Encoder B positive output	
26	DO4-	Digital output -	Customize output port
27	DO5-	Digital output -	Customize output port
28	DO5+	Digital output +	Customize output port
29	HPUL-	Digital input -	
30	DI8-	Digital input -	Customize input port
31	DI7-	Digital input -	Customize input port
32	DI6-	Digital input -	Customize input port
33	DI5-	Digital input -	Customize input port
34	DI3-	Digital input -	Customize input port
35	24V SIGN+	24V positive direction	Active High 24V
36	SIGN+	positive direction	Active High 5V
37	SIGN-	minus direction	Active low 0V
38	HPUL+	high-speed pulse +	
39	24V PULS+	24V pulse +	Active High 24V
40	HSIGN-	High Speed direction -	
41	PULS-	Pulse -	Active low 0V
42	V_REF	Velocity analog control +	
43	PULS+	Pulse +	Active High 5V

44	GND	Digital GND	
45	COM	+24V output GND	
46	HSIGN+	High Speed direction +	
47	COM	+24V output GND	
48	OCZ	Encoder Z Phase-open collector output	
49	COM	+24V output GND	
50	OZ+	Encoder Z positive output	

Notice:

1、When the CN1 terminals are connected，24V PULS+ and PULS+ share PULS-，24V SIGN+ and SIGN+ share SIGN-，The difference is just a 24V high level input and a 5V high level input.

2、digital input (DI) port、digital output (DO) port, Please refer to the parameter description in chapter 8 to set the custom function.

3.2.2 Connection instructions for CN1 control ports

The digital input DI（DI1-DI8）can be connected using the circuit of switches, relays, and open-collector transistors. Power can be supplied from v Servo drivers from an external source.（Please refe Servo drivers 7 for p06-xx I/O parameters）

Servo driver

伺服驱动器

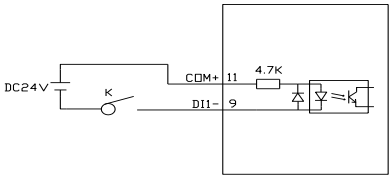

External power input

Servo driver

伺服驱动器

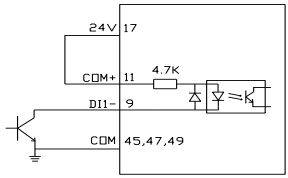

Internal power input

The digital output DO(DO1-DO5) can be connected with relays, photoelectric couplers, etc. The power supply provided inside the drive can be used or external power supply can be used. When using internal power supply, The 24V power supply inside the driver provides only 150mA.If the load is greater than 150mA, be sure to use an external power supply with a supply voltage range of 5-24v.（Please refer to chapter 8.2.7 for p06-xx I/O parameters）

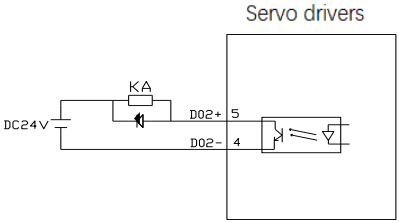

(Relay) External power supply

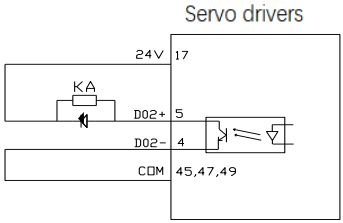

(Relay) Internal power supply

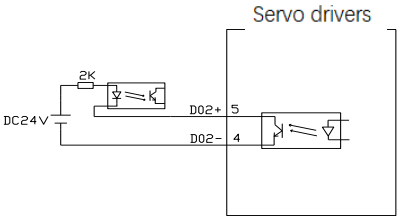

(Optocoupler) External power source

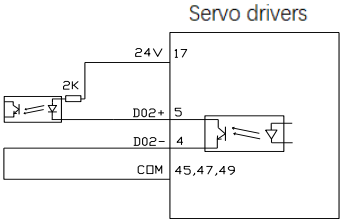

(Optocoupler) Internal power supply

Speed and torque control analog control input effective voltage range (-10v ~10V)，The command value corresponding to this voltage range can be set by the following parameters,P06-40 Speed analog command input gain,P06-43 Torque analog command input gain. For the specific setting method, please read the detailed description of parameters.

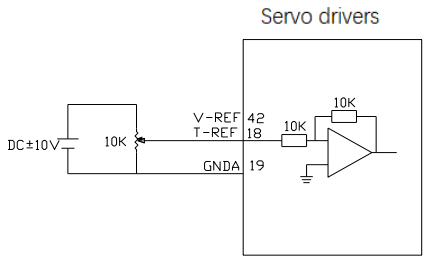

Given external power analog signal

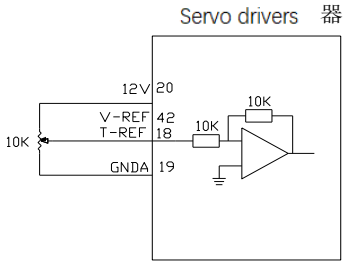

Internal 12V power supply,

speed/torque adjustment by potentiometer

3.3 Description of the CN2 encoder port of the driver

3.3.1 Description of SCSI-20P encoder connector

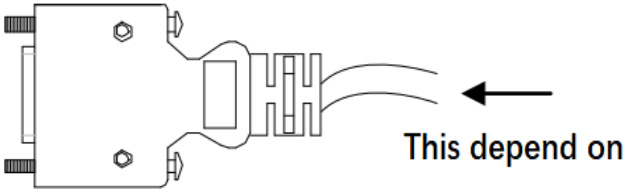

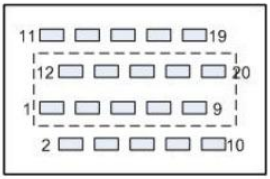

SCSI-20P Pin distribution of the CN2 port

description of **SCSI-20P** encoder connector

Pin number	Label	Definition	Declaration
1	NC	nop	
2	EZ-	Encoder Z negative input	
3	NC	nop	
4	T-	Bus encoder T-	Special for bus drive
5	T+	Bus encoder T+	Special for bus drive
6	EW-	Magnet pole W negative input	
7	EB+	Encoder B positive input	
8	EW+	Magnet pole W positive input	
9	EB-	Encoder B negative input	
10	EZ+	Encoder Z positive input	
11	EA+	Encoder A positive input	
12	EA-	Encoder A negative input	
13	GND	Output power supply GND	
14	+5V	Output power supply 5V	
15	GND	Output power supply GND	
16	+5V	Output power supply 5V	
17	EV+	Magnet pole V positive input	
18	EV-	Magnet pole V negative input	
19	EU-	Magnet pole U negative input	
20	EU+	Magnet pole U positive input	

3.3.2 Description of 1394-6P encoder connector

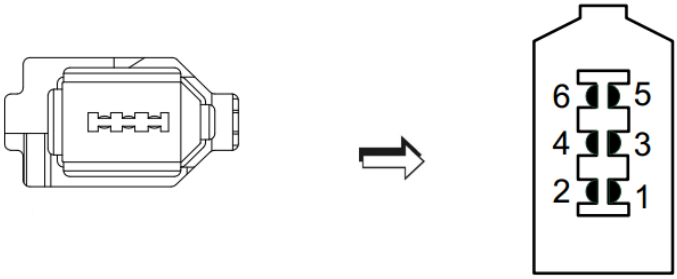

Pin number	Label	Definition	Declaration
1	+5V	Output power supply 5V	
2	GND	Output power supply GND	
3	NC	nop	
4	NC	nop	
5	T+	Bus encoder T+	Special for bus drive
6	T-	Bus encoder T-	Special for bus drive

Notice: The connector of 1394-6p encoder is special for 400W driver and the following models. For wiring, please connect according to the sign of the terminal.

3.4 Description of the driver's CN3/CN4 port

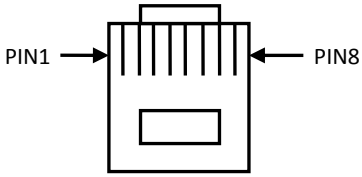

Fin-out number	Label	Defined declaration
PIN1	CANH	CNAH(FSSB)
PIN2	CANL	CNAL(FSSB)
PIN3	CGND	CGND(FSSB)
PIN4	Reservation	Reservation
PIN5	Reservation	Reservation
PIN6	GND	GND
PIN7	485-	485-
PIN8	485+	485+

3.5 Description of the driver's CN5 port

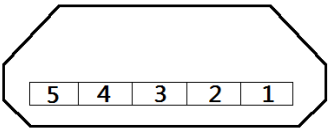

Face CN5 port head-on

Pin-out number	Label	Defined declaration
1	3.3V	RS232 power supply 3.3V
2	TX232	RS232 receive
3	RX232	RS232 send
4	Reservation	No connection
5	GND	RS232 GND

3.6 Port description of power supply and motor power line

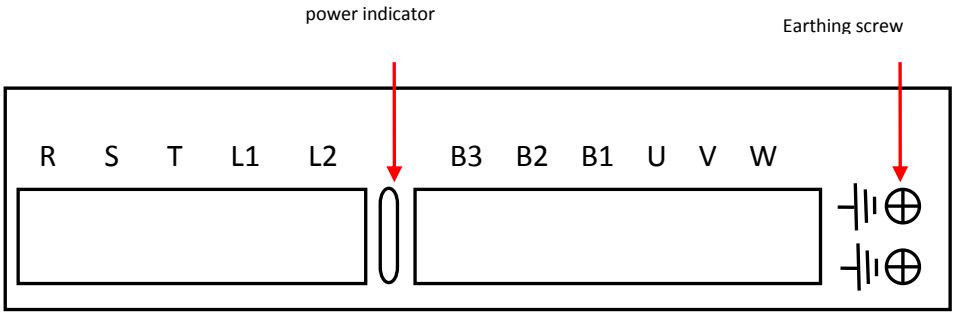

Label	Definition	Declaration
R、S、T	The power supply input of the main circuit	For single/three-phase 220V ac, it is recommended to use three-phase power supply of 1.5kw and above②connect R, T with 0.4kw and below
L1、L2	The input end of the power supply in the control circuit	Connect to single - phase 220V AC
U、V、W	The connection end of the motor power line	Connect the power line of the motor
B1、B2、B3	The connection end of the regenerative resistor	When using the built-in regenerative resistance, short-connect B1 and B2 (our 750W and above drives have built-in regenerative resistance) When using external resistance, disconnect the short connection of B1 and B2, and connect both ends of the resistance to B1 and B3
Earthing screw	Driver protection GND screw	Connect the ground wire of power supply and motor
Label	Definition	Declaration

Notice:

1. Be sure to connect the electromagnetic contactor between the power supply and the main circuit power supply of the servo driver, so that in case of failure of the servo driver, the power can be cut off to prevent fire caused by excessive current.
2. There is no built-in regenerative resistance for drivers of 0.4kw and below. When the feedback energy exceeds the capacitive absorption capacity, an overvoltage alarm of AL.402 will appear, and set p00-30, p00-31 and p00-32 to corresponding values, Refer to **8.2 specification of parameter analysis**.

Chapter 4 Installation instructions

4.1 Installation dimension

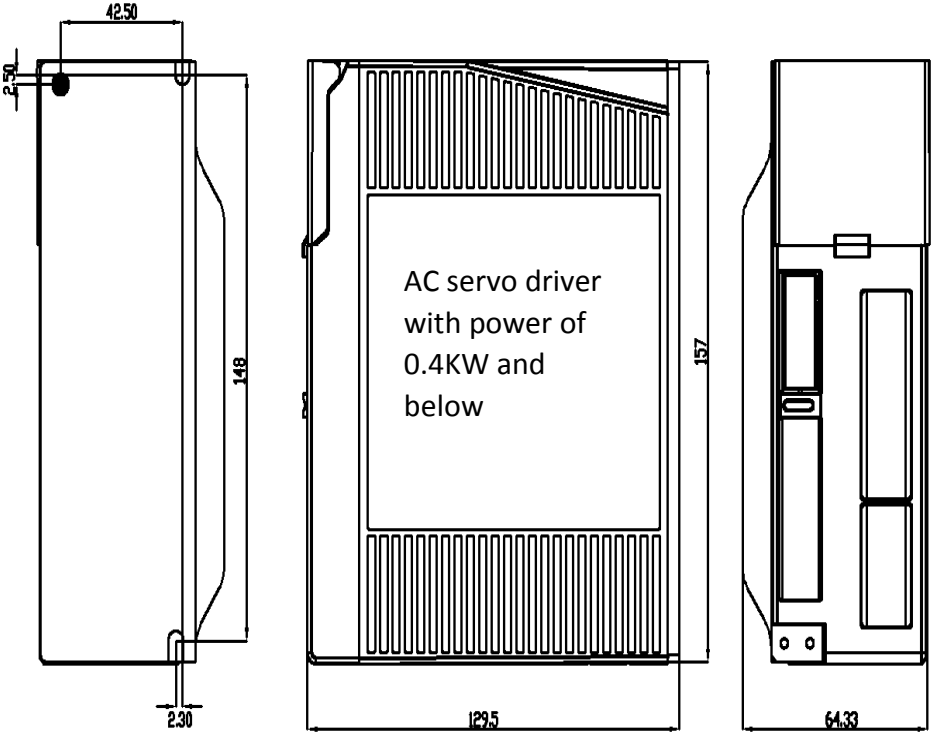

AC servo driver with power of 400W and below（unit：mm）

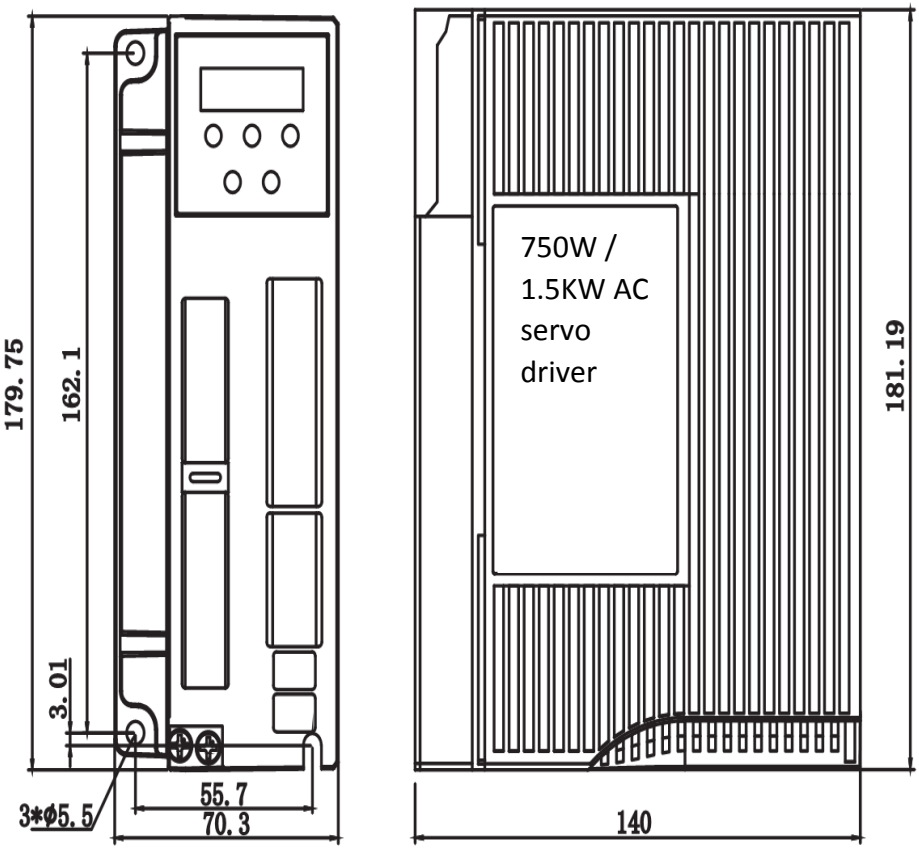

750W / 1.5KW AC servo driver（unit：mm）

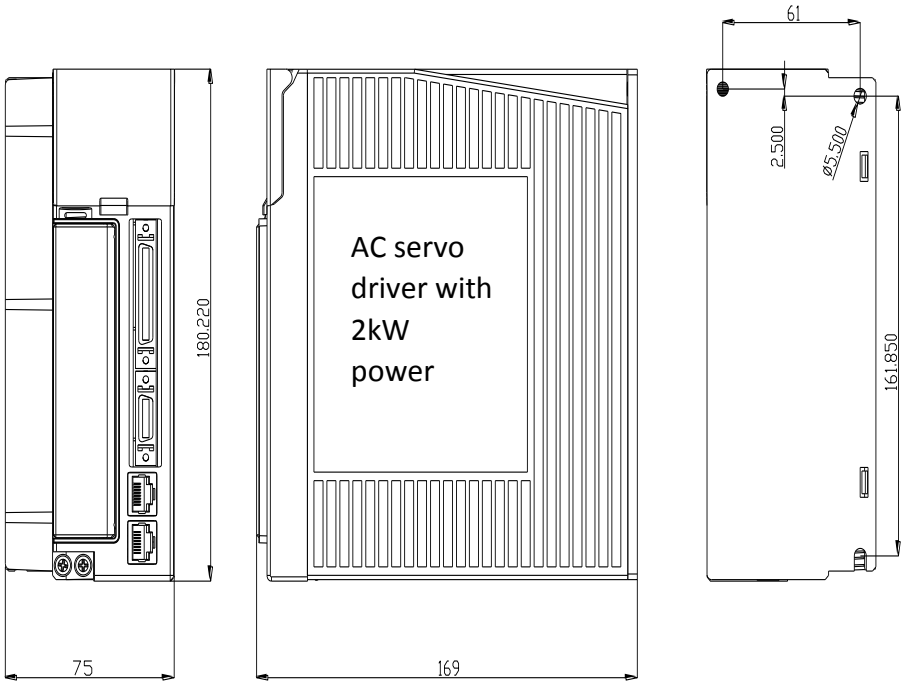

AC servo driver with 2kW power（unit：mm）

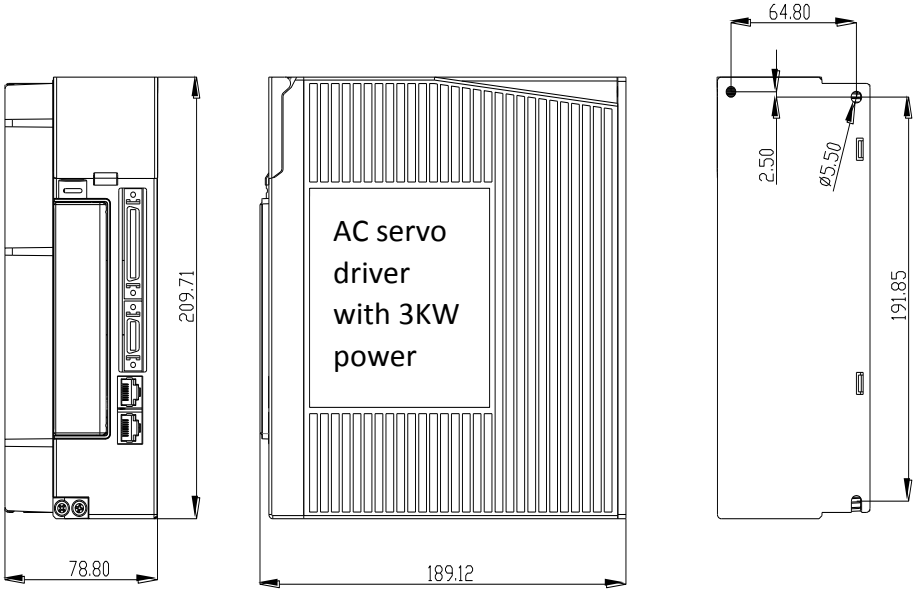

AC servo driver with 3KW power（nuit：mm）

Notice:

1. The normal installation direction of the servo driver must be vertical, with the top facing upward to facilitate heat dissipation.

2. The device shall be well ventilated when the driver is installed, and the distance between multiple drivers shall not be less than 5CM when they are used side by side in the cabinet.

3. In order to ensure safe use, please make sure that the earthing protection terminal of the driver is well connected with the protective ground of the device!

4.2 Install the environment used

The installation environment has a direct impact on the normal operation and service life of the product, so the following conditions must be met:

1. Working environment temperature: 0 ~ 55℃;Working environment humidity: 10% ~ 90% (no condensation).
2. Storage environment: -20℃ ~ +85℃;Humidity of storage environment: less than 90% (no condensation).
3. Vibration: below 0.5G.
4. Prevent dripping rain or damp conditions.
5. Avoid exposure to the sun.
6. Prevent oil mist, salt erosion.
7. Prevent corrosive liquids, gas, etc.
8. Prevent dust, cotton wool and metal particles from invading.
9. Stay away from radioactive materials and combustible materials.
10. Space should be reserved around the location of the drivers in the cabinet for convenient loading, unloading and maintenance.
11. Pay attention to the air flow in the cabinet, if necessary, add an external fan to enhance the air flow, reduce the drive environment temperature to facilitate heat dissipation;The long-term operating temperature is below 55℃.
12. Try to avoid nearby vibration source, add shock absorption device such as vibration absorber or anti - vibration rubber gasket.
13. If there is an electromagnetic interference source nearby, and the power supply and control line of the driver are interfered, resulting in the wrong operation, noise filter can be added or various effective anti-interference measures can be adopted to ensure the normal operation of the driver. (the noise filter will increase the leakage current, so the isolation transformer should be installed at the input end of the driver power supply.)

Chapter 5 Panel displays instructions and Settings

5.1 The instructions of the panel functions

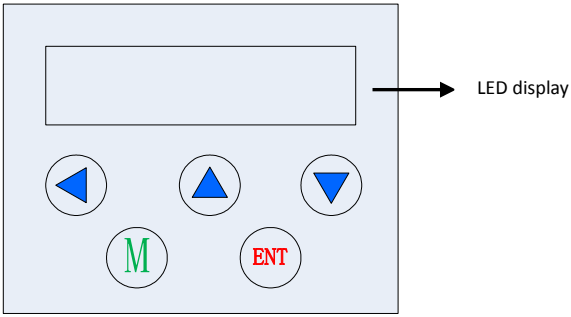

JASD series ac servo panel with six LED digital display state: 5 - bit key input command,Specific key functions are as follows:

Panel key label	Definition	Explaination
	LEFT button	shift function Use to toggle high/low display in parameter mode
	UP button	Display changes, value added function
	DOWN button	Display changes, value reduction function
	M button	Function switch and undo exit
	ENT button	Identify or save functionality

Remarks：

ENT button Hold for 3 seconds to confirm or save the function

Under the monitoring and parameter interface, long press ENT button to flip quickly

5.2 Operation mode switching process

JASD series ac servo has four function modes, namely state display mode, monitoring mode, parameter setting mode and auxiliary mode. The switching process between them is as follows:

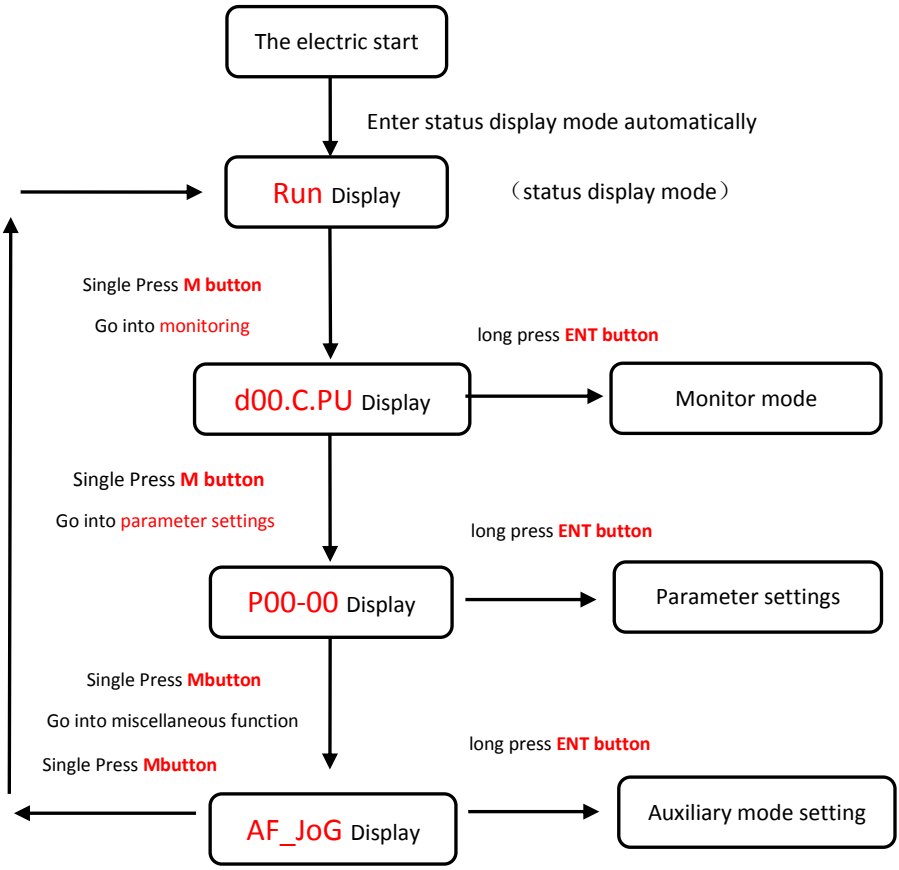

Note: after pressing ENT to enter the mode setting, you can exit the mode selection by pressing M

5.3 Status display

The display discrimination is as follows:

Bit data | Abbreviation symbol

Status display bit data meaning:

Display	Meaning	Display	Meaning
	Control circuit power on display		Main circuit power supply ready display
	Speed and torque control: consistent display of speed Position control: display after positioning		Rotate the check out display
	Base block display The light is ON at servo OFF state and OFF at ON state		Speed, torque control: speed command input Position control: instruction pulse input display

Status display abbreviation meaning:

Display	Meaning
nrdy	Servo not ready (power supply not on)
rdy	Servo ready (servo motor is not energized)
run	In servo enable state (servo motor energized state)
Pot	Indicates that the input port of the forward overpass signal is in a valid state, and the forward turn instruction of the motor is invalid
not	Indicates that the input port of the reverse overpass signal is in a valid state, and the motor inversion instruction is invalid
FinSh	Servo related operation completed correctly
SY_on	The servo is in the enabling state and cannot be operated. It must be turned off to the enable
no_oP	Invalid value entered, the servo does not perform the current

	operation
LocKd	The relevant parameters of the servo are locked, which shall be unlocked before operation
AL-501	Servo fault display. Please refer to chapter 9 for fault definition

5.4 Write and save method for parameter setting

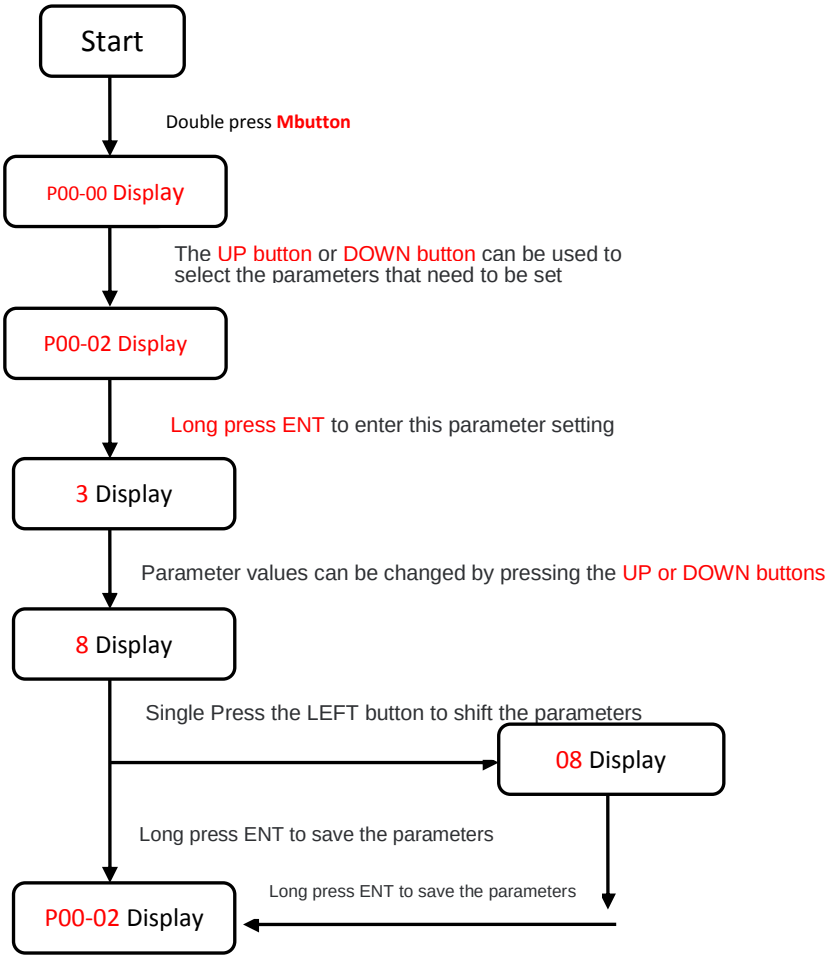

Chapter 6 control mode and setting

6.1 Position control

6.1.1 Position control wiring diagram

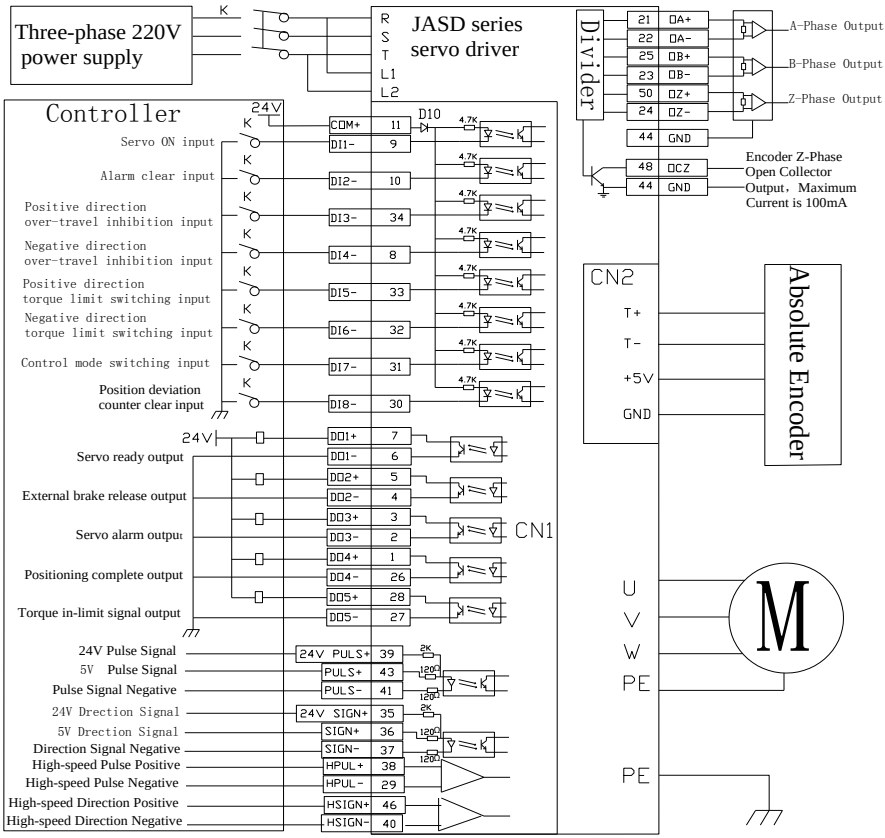

6.1.2 Position control wiring diagram

Controller end Direction + pulse input mode : the direction + pulse input mode can be divided into 5V and 24V signal input modes. Twisted pair wire connection can improve the anti-interference capability. In general, this position control wiring method is often used in MCU controller system. The maximum input pulse frequency of this control is 500KHz

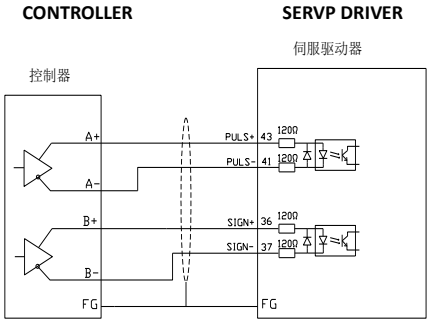

5V pulse + direction input mode

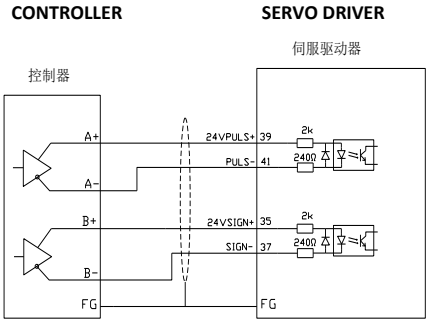

24V pulse + direction input mode

Controller - end collector open input mode description: single - end input mode can use either internal power supply or external power supply. But do not use dual power input to avoid damaging the drive. Generally PLC controller system USES this kind of position control wiring method

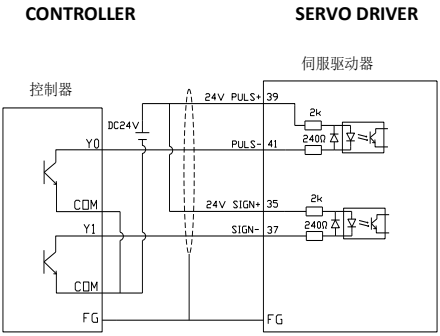

Open collector USES external power supply

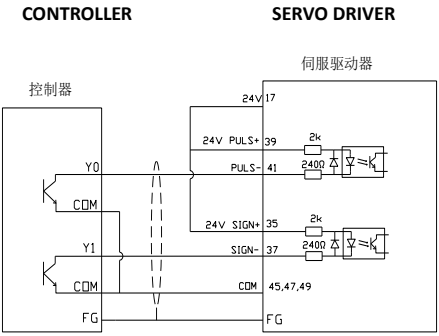

Open collector USES internal power supply

Note: high level must be between 3.3-5v when high speed pulse port is input

6.1.3 Description of position control mode parameters

1、Motor and driver control parameters

Para code	Name	Set range	Default	Unit
P01-01	Control Mode Setting	0-6	0	0: position mode 1: speed mode 2: torque mode 3: speed, torque 4: position , speed 5: position, Torque 6: Servo batch function
P03-00	Location command source	0-1	0	0: pulse command 1: Numbers given
P03-01	Command pulse mode	0-3	1	0: Orthogonal impulse command 1: Direction + pulse command 2 or 3:Double pulse instruction
P03-02	Instruction pulse input terminal	0-1	0	0: low speed pulse 1: high-speed pulse
P03-03	Reverse the command pulse	0-1	0	Set the initial direction of motor rotation
P03-09	The number of instruction pulses per revolution	0-65535	10000	Set according to user requirements See the specification of 8.2 parameters for details
P03-10	Molecule of electronic gear 1	1-65535	1	Set according to user requirements See the specification of 8.2 parameters for details
P03-11	Denominator of electronic gear 1	1-65535	1	
P03-15	Position deviation is Set too large	0-65535	30000	Set according to user requirements
P03-25	Output pulse number of one revolution of absolute motor	0-60000	2500	Set according to user requirements

2、gain parameter

Please refer to the parameter adjustment in chapter 7 for adjustment

6.1.4 Example of electronic gear ratio calculation

1、Ball screw drive

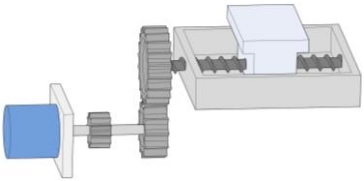

Assumptions:

(1) mechanical parameters: deceleration ratio R is 2/1, lead lead of lead screw is 10mm

(2) resolution of each turn of position ring of absolute value encoder: 17bit=131072

(3) load displacement corresponding to 1 position instruction (instruction unit) : 0.001mm

Then:

According to (1) and (3), the position instruction (instruction unit) value required for the screw to rotate 1 turn (table movement 10mm) :

$$\frac{10}{0.001}=10000$$

The electronic gear ratio is :(B is the numerator, A is the denominator)

$$\frac{B}{A}=\frac{131072}{10000}\times\frac{2}{1}=\frac{16384}{625}$$

Finally, the parameter p03-10 is set to 16384, and p03-11 is set to 625

1、Belt pulley drive

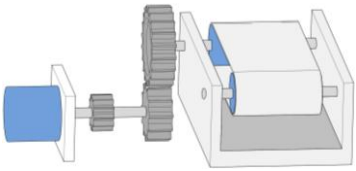

Assumptions:

(1) mechanical parameters: deceleration ratio R: 5/1, pulley diameter: 0.2m(pulley circumference: 0.628m)

(2) resolution of each turn of position ring of absolute value encoder: 17bit=131072

(3) load displacement corresponding to 1 position instruction (instruction unit) : 0.000005m

Then:

According to (1) and (3), the value of position instruction (instruction unit) required for the pulley (load) to rotate 1 turn can be obtained:

$$\frac{0.628}{0.000005}=125600$$

The electronic gear ratio is :(B is the numerator, A is the denominator)

$$\frac{B}{A}=\frac{131072}{125600}\times\frac{5}{1}=\frac{4096}{785}$$

Finally, p03-10 is set to 4096 and p03-11 is set to 785

2、Rotating load

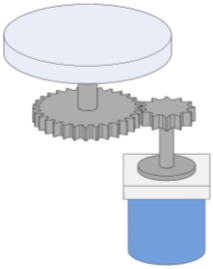

Assumptions:

(1) mechanical parameters: the deceleration ratio R is 10/1, and the rotation Angle of the load axis for one turn is 360°

(2) resolution of each turn of position ring of absolute value encoder: 17bit=131072

(3) load displacement corresponding to 1 position instruction (instruction unit) : 0.01°

Then:

According to (1) and (3), the value of position instruction (instruction unit) required for 1 rotation of the load is:

$$\frac{360}{0.01}=36000$$

The electronic gear ratio is :(B is the numerator, A is the denominator)

$$\frac{B}{A}=\frac{131072}{36000}\times\frac{10}{1}=\frac{8192}{225}$$

Finally, the parameter p03-10 is set to 8192 and p03-11 to 225.

6.2 **speed control**

6.2.1 **Speed control wiring diagram**

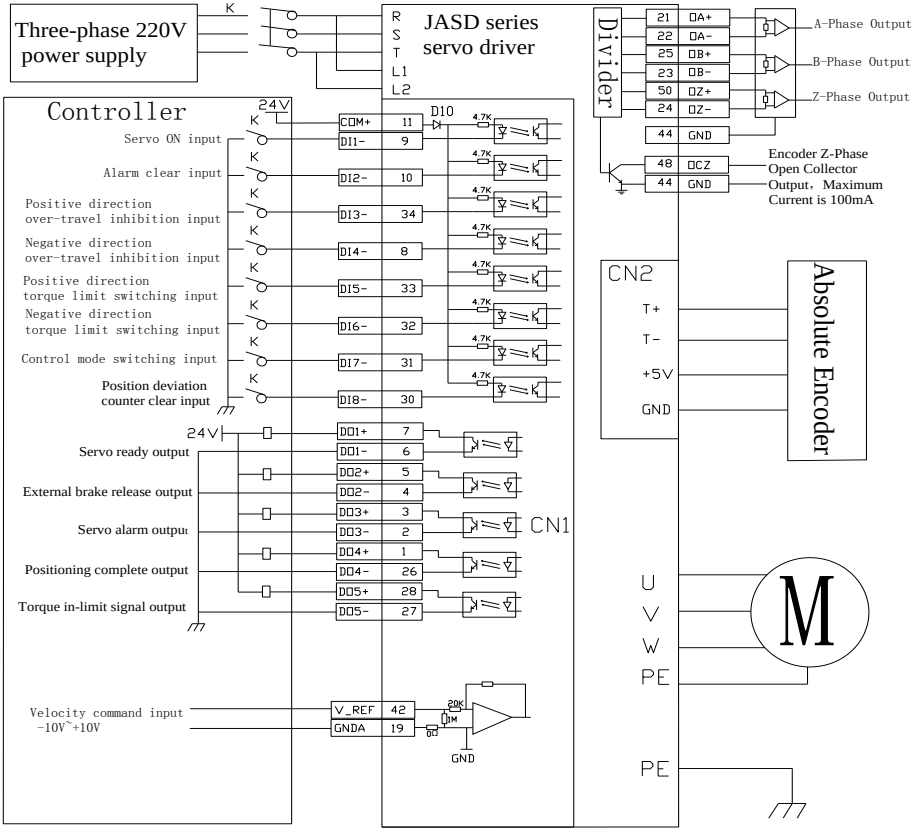

6.2.2 Description of speed control mode parameters

1、Motor and driver control parameters

Para code	Name	Set range	Default	Unit
P01-01	Control Mode Setting	0-6	1	0: position mode 1: speed mode 2: torque mode 3: speed, torque 4: position, speed 5: position, torque 6: Servo batch function
P04-00	Speed instruction source	0-3	0	0: External analog instruction 1: digital instruction (parameter setting) 2: digital instruction (communication) 3: internal multiple sets of instructions
P04-01	Speed command analog volume invert	0-1	0	Set the initial direction of motor rotation
P04-02	The numerical velocity is given	-6000—6000	0	Set the speed command value, the speed mode and p04-00 is 1.
P04-06	Forward speed limit	0-6000		Restricted forward speed
P04-07	Reverse speed limit	-6000-0		Restricted reverse speed
P06-40	Speed analog command input gain	10-2000	300	Set according to user requirements See the specification of 8.2 parameters for details

2、gain parameter

Please refer to the parameter adjustment in chapter 7 for adjustment

6.3 torque control

6.3.1 Torque control wiring diagram

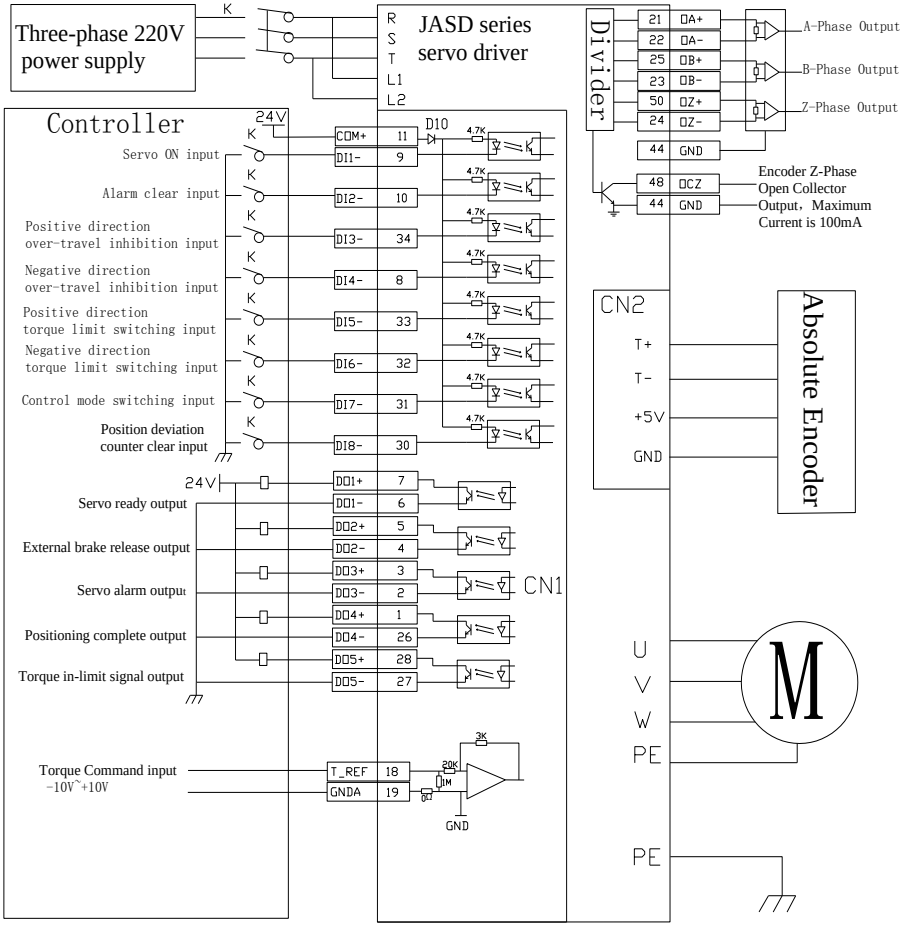

6.3.2 Description of torque control mode parameters

1、Motor and driver control parameters

Para code	Name	Set range	Default	Unit
P01-01	Control Mode Setting	0-6	2	0: position mode 1: speed mode 2: torque mode 3: speed,torque 4: position,speed 5: position,torque 6: Servo batch function
P05-00	Torque instruction source	0-3	0	0: external simulation instruction (speed limiter is set by p05-02) 1: digital instruction (speed limiter is set by p05-02) 2: external simulation instruction (speed limiter is determined by speed simulation instruction) 3: digital instruction (speed limiter is determined by speed analog instruction)
P05-01	Torque instruction analog quantity is reversed	0-1	0	Set the initial direction of motor rotation
P05-02	Torque mode speed limiter given value	0-6000	1000	Set the maximum speed of the motor in torque mode. P05-00 is 0,1
P05-05	Torque limiter setting source	0-2	0	Used to adjust the source of torque limits
P05-10	Internal forward torque limiter	0-300.0	200.0	Limit forward torque values

P05-11	Internal reverse torque limiter	-300.0-0	-200.0	Limit the reverse torque value
P06-43	Torque analog command input gain	0-100	10	Set according to user requirements See the specification of 8.2 parameters for details

2、Torque control command related gain parameters

Please refer to the parameter adjustment in chapter 7 for adjustment

Chapter 7 trial operation and parameter adjustment

7. 1 test run

7.1.1 Pre operation detection

In order to avoid damage to the servo driver or mechanism, please remove all the load of the servo motor before operation, and carefully check whether the following precautions are normal, and then power on for no-load test; After the no-load test is normal, the load of the servo motor can be connected for the next test.

Notes:

Test before power on	1. Check whether the servo drive has obvious appearance damage 2. The connecting part of distribution terminal shall be insulated 3. Check whether there is any foreign body inside the drive 4. Servo drivers, motors and external regenerative resistors shall not be placed on combustible objects 5. In order to avoid the failure of the electromagnetic brake, please check whether the circuit can be stopped immediately and cut off 6. Confirm whether the external power supply voltage of the servo driver meets the requirements 7. Confirm whether the motor U, V and W power lines, encoder lines and signal lines are connected correctly (confirm according to motor labels and instructions)
Power on detection	1. When the servo driver is powered on, do you hear the sound of relay action 2. Whether the servo driver power indicator and LED display are normal 3. Confirm whether the parameters are set correctly or not. Unexpected actions may occur depending on the mechanical characteristics，do not make extreme adjustments to the parameters 4. Whether the servo motor is self-locking or not Please contact the manufacturer if the servo motor has too much vibration and sound during operation

7.1.2 No-load test run

1、 JoG mode no-load test, the user can not need to connect additional wiring, for the sake of safety, before the JoG no-load speed test, please fix the motor base, in case the motor speed change caused by the reaction force caused by dangerous. The following is a simple wiring diagram in JoG mode:

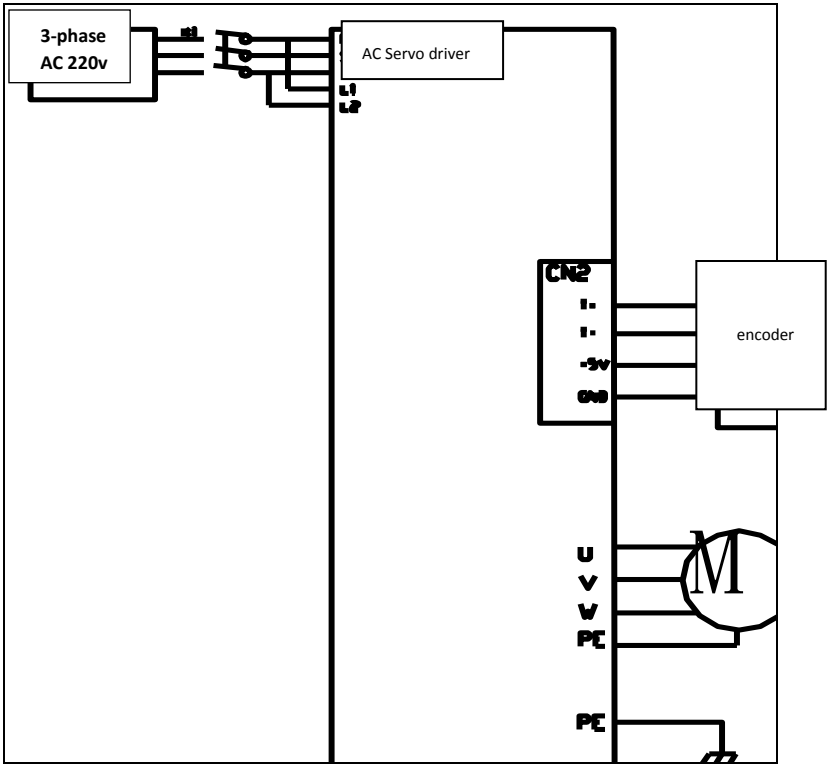

2、Select JoG mode for test running according to the following flowchart

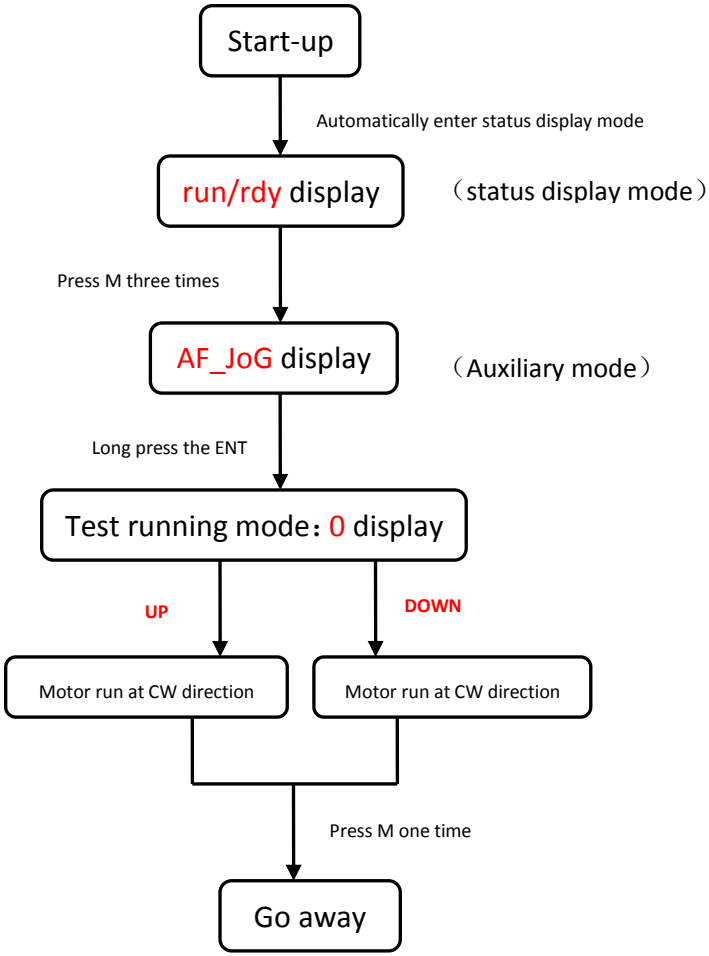

Ramarks: Long press ENT in test running mode, enter the speed edit menu, edit speed by UP, Down and Left keyboard combination, afterwards long press ENT, reenter Jog mode, press Up and Down motor will run at new setting speed.

This setting speed will not be saved after exiting Jog mode. Please refer chapter 8.4 the accessory function.

7.2 parameter adjustment

After selecting the appropriate control mode according to the equipment requirements, you need to make reasonable adjustments to the servo gain parameters, to make servo driver can drive the motor quickly and accurately to maximize the mechanical performance.

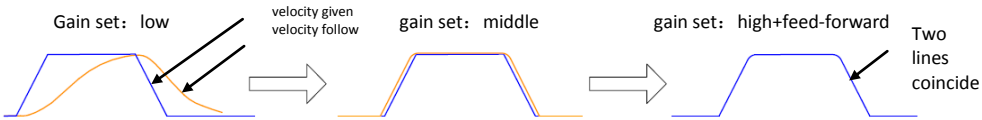

Velocity-loop gain：80.0Hz	Velocity-loop gain：160.0Hz	Velocity-loop gain：160.0Hz
Velocity-loop ratio gain：40.0Hz	Velocity-loop ratio gain：60.0Hz	Velocity-loop ratio gain：60.0Hz
Velocity-loop integral time：10.0ms	Velocity-loop integral time：10.0ms	Velocity-loop integral time：10.0ms
Velocity feed-forward gain：0	Velocity feed-forward gain：0	Velocity feed-forward gain：50.0%
Load inertia ratio：1.00	Load inertia ratio：1.00	Load inertia ratio：1.00

The servo gain is adjusted by multiple loop parameters (position loop, velocity loop, filter & etc.), and they will affect each other. Therefore, the setting of the gain needs to be balance adjusted according to certain rules.

The process of gain adjustment can be performed according to the following diagram：

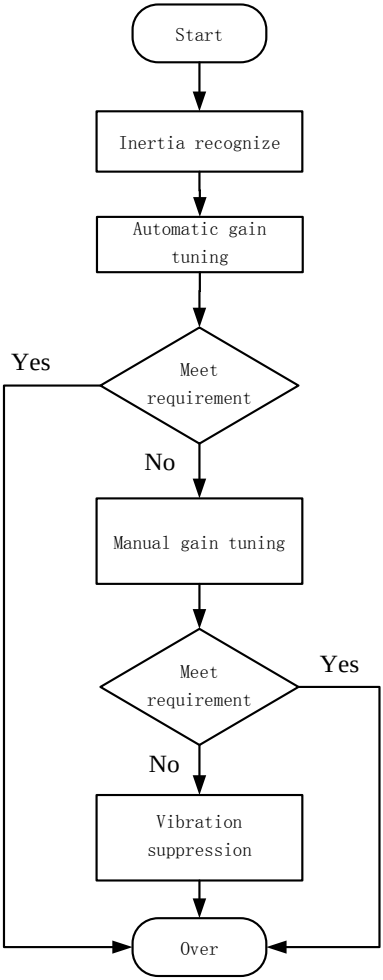

Input to P01-04 according to mechanical output inertial ratio or execute load rotor inertial recognition AF_JL.

Set P01-02 to be 1 or 2, gradually increasing P01-03 until noise heard according to request, and return back 2 steps under current rigidity grade.

Set P01-02 to be 0 after saving P01-00, P02-0, P02-10, P02-11, P02-13, P02-14, P08-20 manually, afterwards you can tune manually.

7.3 Gain tuning manually

7.3.1 Basic parameter

When the automatic gain adjustment fails to achieve the desired effect, you can manually fine-tune the gain to optimize the effect.

The servo system consists of three control loops. The basic control block diagram is as follows:

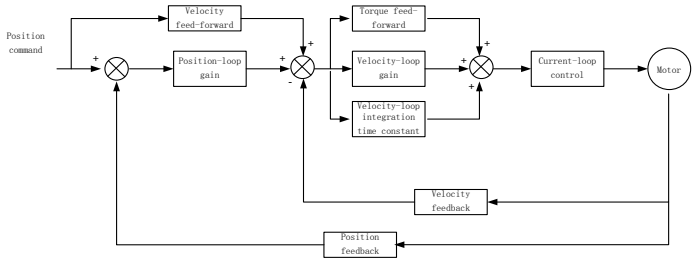

The gain adjustment needs to follow the order of inner loop first and outer loop second. First set the load inertia ratio P01-04, then adjust the velocity loop gain, and finally adjust the position loop gain.

Velocity loop gain: Increase the setting value as much as possible in case of not vibration no noise, which can improve the speed following performance and speed up the positioning time.

Velocity integral constant: The smaller the set value is, the faster the integral speed is and the stronger the integral effect is. If it is too small, it will cause vibration and noise.

parameter code	designation	setting range	setting	Explain
P01-02	Real-time automatic tuning mode	0-3	1	0: Manually tuning rigidity 1: standard mode automatic tuning rigidity. In this mode, P02-00, P02-01, P02-10, P02-11, P02-13, P02-14, P08-20 will be set automatically according to the rigidity level set in P01-03. Manual tuning does not work. The following parameters are set by the user:

				P02-03(Velocity feed-forward gain), P02-04 (velocity feed-forward smoothness constant) 2: Position mode automatic tuning rigidity, in this mode, P02-00, P02-01, P02-10, P02-11, P02-13, P02-14, P08-20 will be set automatically according to the rigidity level set in P01-03. Manual tuning does not work。The following parameters will be fixed and cannot be changed: P02-03 (velocity feed-forward gain) : 30.0% P02-04 (velocity feed-forward smooth constant) : 0.50 3:automatic tuning rigidity 2, in this mode, P02-00, P02-01, P02-10, P02-11, P02-13, will be set automatically according to the rigidity level set in P01-03. Following parameter will be setting by user: P02-03 (velocity feed-forward gain) , P02-14 (velocity integral constant 2) , P08-20 (torque command filter constant 1) , P08-21 (torque command filter constant2)
P01-03	Real-time automatic tuning rigidity	0-31	13	Built-in 32 kinds of gain parameters. It works when P01-02 is set to 1, 2, or 3. It can be used directly according to the actual situation. The larger the set value, the stronger the rigidity.
P02-00	Velocity control gain 1	0-3000. 0	80.0	▸The larger the setting value, the higher the gain, the greater the rigidity, and the smaller the position lag, but if the value is too large, the system will shake and overshoot.

				▸Increase the value as much as possible without shake. ▸For gain at static.
P02-01	Velocity control gain2	0-3000.0	80.0	▸The larger the setting value, the higher the gain, the greater the rigidity, and the smaller the position lag, but if the value is too large, the system will shake and overshoot. ▸Increase the value as much as possible without shake. ▸For gain at dynamic.
P02-03	velocity feed-forward gain	0-100.0	30.0	The feed-forward gain of the velocity loop. The larger the parameter value, the smaller the system position tracking error and the faster the response. However, if the feed-forward gain is too large, the position loop of the system will be unstable, and it’s easy to cause overshoot and shake.
P02-04	velocity feed-forward smooth constant	0-64.00	0	This parameter is used to set the velocity loop feed-forward filtering time constant. The larger the value, the larger the filtering effect, but at the same time the phase lag increases.
P02-10	Velocity ratio gain 1	1-2000.0	40.0	▸The larger the setting value, the greater the gain and rigidity. The parameter value is set according to the motor and load. ▸Increase the value as much as possible without shock. ▸For gain at static.
P02-11	velocity integral	0.1-1000.0	10.0	▸Speed regulator integration time constant. The smaller the setting value is, the faster

	constant 1			the integration speed is, the greater the rigidity is. If it is too small, it will cause vibration and noise.。 ▸reduce this parameter as much as possible in case of no vibration. ▸This parameter is for steady state response.
P02-12	Fake differential feed-forward control value 1	0-100.0	100.0	▸When set to 100.0%, the velocity loop adopts PI control, and the dynamic response is fast; when set to 0, the velocity loop integral effect is obvious, and filter the low frequency interference, but the dynamic response is slow. ▸By tuning this value, the speed loop have better dynamic response, and at the same time, it can increase the resistance to low-frequency interference.
P02-13	Speed proportional gain 2	1-2000.0	45.0	▸The larger the setting value, the greater the gain and rigidity. The parameter value is set according to the motor and load.。 ▸Increase the value as much as possible without shake. ▸For gain during dynamic.
P02-14	Velocity integral constant 2	0.1-1000.0	1000.0	▸Speed regulator integration time constant. The smaller the setting value is, the faster the integration speed is, the greater the rigidity is. If it is too small, it will cause vibration and noise.。 ▸Decrease the value as much as possible without shake. ▸This parameter is for steady state response.

P02-15	Fake differential feed-forward control value 2	0-100.0	100.0	▸When set to 100.0%, the speed loop adopts PI control, and the dynamic response is fast; when set to 0, the speed loop integral effect is obvious, and low frequency interference can be filtered, but the dynamic response is slow. ▸By tuning this value, the speed loop have better dynamic response, and at the same time, it can increase the resistance to low-frequency interference.

7.3.2 Gain switching

The gain switching function can be triggered by the internal state of the servo or the external DI port. It is only effective in the position control and speed control modes. With gain switching, the following effects can be achieved

Switch to lower gain when the motor is static (servo enabled) to hold vibration

Switch to higher gain when the motor is static (servo enabled) to short positioning time;

Switch to higher gain in the running state of the motor to obtain better command following performance;

Switch to different gain settings by external signals according to the use situation.

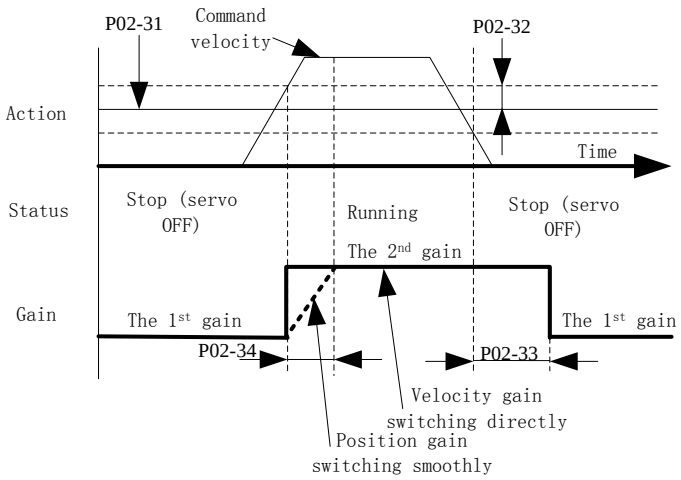

relative parameter

Para code	Name	Set range	Default	Unit	Effective time
P02-30	Gain switching mode	0-10	7	---	Real time
P02-31	Gain switching grade	0-20000	800	---	Real time
P02-32	Gain switching lag	0-20000	100	---	Real time
P02-33	gain switching delay	0-1000.0	10.0	1ms	Real time
P02-34	Position gain switching time	0-1000.0	10.0	1ms	Real time

7.3.3 Feed-forward function

Speed feed-forward: During position control, the speed control command required from the position command calculation is added to the output of the position regulator, which can reduce the position deviation to improve the response of the position control.

Torque feed-forward: Calculate the required torque command from the speed control command and add it to the speed regulator output to improve the response of the speed control

A. Speed feed forward operation

With the speed feed-forward smoothing constant set to be 50 (0.5ms), the speed feed-forward gain is gradually increased to meet the system requirements. However, too large speed feed-forward gain will cause position overshoot, this will make the setting time longer.

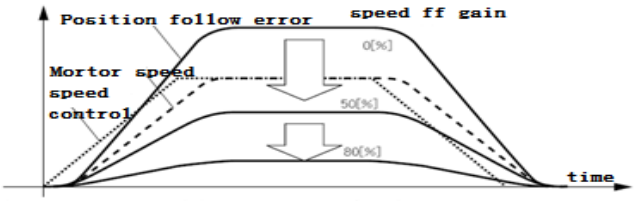

B. Torque feed-forward operation

With the torque feed-forward smoothing constant set to be 50 (0.5ms), the torque feed-forward gain is gradually increased to meet the system requirements.

relative parameter

Para code	Name	Range	Default	Unit	Effective time
P02-03	velocity feed-forward gain	0-100.0	30.0	1.0%	Real time
P02-04	velocity feed-forward smooth constant	0-64.00	0.5	1ms	Real time
P02-19	torque feed-forward gain	0-30000	0	1.0%	Real time
P02-20	torque feed-forward smooth constant	0-64.00	0.8	1ms	Real time

7.3.4 Disturbance observer

The disturbance torque value can be inferred by using the disturbance observer and compensated on the torque command to reduce the influence of disturbance torque and vibration. This observation function is valid in position mode and velocity mode.

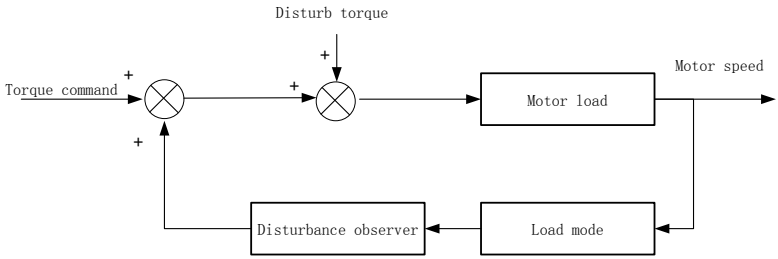

Using instruction：

a) Set P08-26 (filter constant) to a larger value, and then gradually increase P08-25 (compensation gain). At this time, the action sound may become louder; after confirming that the current compensation gain is effective, gradually decrease P08-26.

b) Increasing the gain can improve the effect of disturbance torque suppression, but the noise becomes louder

c) After shortening the filter time constant, the disturbance torque with less delay can be estimated, and the effect of suppressing the influence of disturbance can be improved, but the noise will become louder.

d) Please look for settings with better balance.

Relative parameter

Para code	Name	Range	defaul t	Unit	Effectiv e time
P08-25	Disturbance torque compensation gain	0-100.0	0	%	Real time
P08-26	disturbance torque filter time constant	0-25.00	0.8	1ms	Real time

7.3.5 Resonance suppression

If the rigidity of the servo system is too large and the response is too fast, it may cause resonance in the mechanical system. This situation can be improved by reducing the gain of the control loop. Resonance suppression can also be achieved by using a low-pass filter and notch without reducing the gain

1、Resonance frequency detection

The resonance frequency of the mechanical system can be observed through monitoring items d26.1.Fr, d28.2.Fr

2、Torque command low-pass filter（P08-20）

The low-pass filter is used in the case when the vibration frequency is deviated, and it can have a good performance when used at high frequencies. By setting the filter time constant, it will attenuate resonance near the resonance frequency. However, the low-pass filter will make the system phase lag, reduce the bandwidth, and reduce the phase margin easily cause loop oscillation. Therefore, it can only be applied to high frequency vibration applications.

Filter deadline frequency（Hz）= 1/(2*pi*p08-20(ms)*0.001)

para code	Name	Range	Defaul t	Unit	Effective time
P08-20	Torque command filter constant	0-25.00	0.8	1ms	Real time

3、Notch filter

The notch filter is used when the system resonance frequency is fixed. The trap can reduce the mechanical resonance by reducing the gain at a specific frequency. After the trap is set correctly, the vibration can be effectively suppressed. You can try to increase the servo gain. The servo has 4 built-in traps. When P08-11 is set to 0, 4 sets of traps can be started at the same time, and parameters can be entered manually.

A. Self-adaptive notch mode

Through the self-adaptive notch filter function module, the servo system will automatically identify the current resonance frequency and automatically configure the notch parameters. Using instruction as following:

a) Set P08-11 to 1 or 2 according to the number of resonance points. When resonance occurs, you can set P08-11 to 1 and turn on an self-adaptive notch. After gain tuning, set P08-11 to 2 to turn on 2 adaptive notches if new resonance appears.

b) When the servo is running, the parameters of the third and fourth sets of notch filters will be automatically updated, and the corresponding function code will be automatically stored every 30 minutes. After being stored, the notch parameters will also be saved after power off.

c) If the resonance is suppressed, it shows that the self-adaptive trap is effective. After the servo system have run stably for a period of time, set P08-11 to 0, and the notch parameters will be fixed to the last updated

value. This operation can prevent the trap parameters from being updated to wrong values due to wrong operations during servo running, which will intensify the vibration.

d) If the vibration cannot be eliminated for a long time, please turn off the servo enable in time.

If there are more than two resonance frequency points, the self-adaptive notch cannot meet the requirements, in this case the manual notch can be used.

Relative parameter

para code	name	Description
P08-11	self-adaptive notch filter Mode selection	range：0-4 0：The 3rd and 4th notch filter parameters will not be updated automatically, it's saved as the current values. But manual input is allowed. 1：One of the self-adaptive notch filter is effective, the 3rd notch parameter will be updated automatically, manual input is not allowed. 2：Two of the self-adaptive notch filter is effective, the 3rd and 4th notch parameter will be updated automatically, manual input is not allowed. 3：Detect resonance frequency only 4：Clear the 3rd and 4th notch parameters and restore to default value.
P08-13	Self-adaptive notch filter vibration detect door limit	Setting range：0-7 This parameter sets the sensitivity of the self-adaptive notch vibration detection. The smaller the parameter value, the more sensitive the detection sensitivity is.

B. Setting the notch parameters manually

a) The resonance frequency of the mechanical system can be observed through monitoring items d26.1.Fr, d28.2.Fr

b) Enter the resonance frequency from the previous step into the notch parameters, simultaneously input the width level and depth level of the same notch teams.

c) If the vibration is suppressed, it means the notch is functioning. You can continue to increase the gain and repeat the previous two steps after new vibrations appear.

d) If the vibration cannot be removed for a long time, turn off the servo ENA in time.

C. Notch Width Grade

$$\text{Notch Width Grade} = \frac{\text{Notch width}}{\text{Notch central frequency}}$$

The notch width represents the frequency bandwidth with a magnitude of -3dB relative to the center frequency of the notch

D. Notch Depth Grade

$$\text{Notch Depth Grade} = \frac{\text{Output}}{\text{Input}}$$

When the notch depth level is 0, the input is completely suppressed at the center frequency; when the notch level is 100, the input can be completely passed at the center frequency.

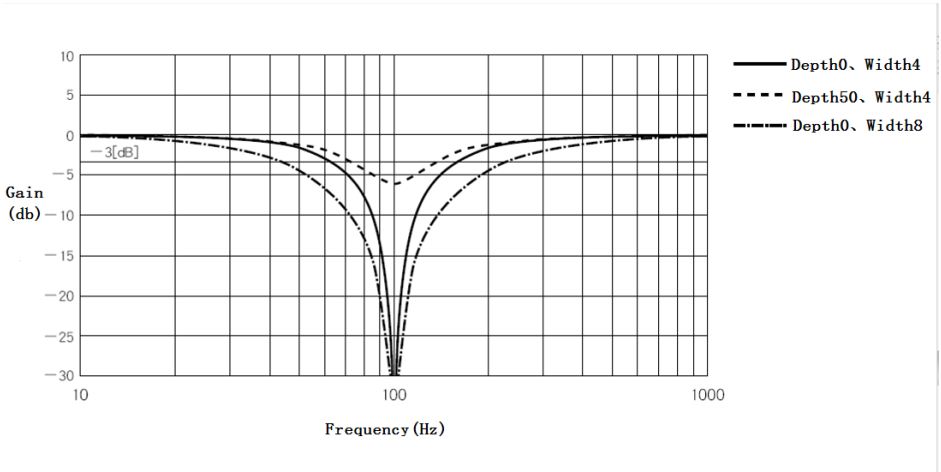

relative parameter

Para code	Name	Description
P08-30	Notch filter 1	Setting range: 300-5000, Unit: Hz

	frequency	Notch is non-effective when the Notch filter 1 central frequency set to be 5000
P08-31	notch filter 1 width	Setting range: 0-20 notch 1’ s notch width grade is the ratio between width and central frequency
P08-32	notch filter 1 depth	Setting range: 0-99 notch 1’ s notch depth grade is the ratio between the input and output of the center frequency of the notch The larger this parameter, the smaller the notch depth and the weaker the effect.

Notch relative parameter

Para code	name	Range	default	unit	Effective time
P08-11	Self-adaptive notch mode selection	0-4	0	---	Real time
P08-13	Self-adaptive notch filter vibration detect door limit	1-7	4	---	Real time
P08-31	Notch filter 1 width	0-20	2	---	Real time
P08-32	Notch filter 1 depth	0-99	0	---	Real time
P08-33	Notch filter 2 frequency	300-5000	5000	HZ	Real time
P08-34	Notch filter 2 width	0-20	2	---	Real time
P08-35	Notch filter 2 depth	0-99	0	---	Real time
P08-36	Notch filter 3 frequency	300-5000	5000	HZ	Real time
P08-37	Notch filter 3 width	0-20	2	---	Real time
P08-38	Notch filter 3 depth	0-99	0	---	Real time
P08-39	Notch filter 4 frequency	300-5000	5000	HZ	Real time
P08-40	Notch filter 4 width	0-20	2	---	Real time
P08-41	Notch filter 4 depth	0-99	0	---	Real time

Chapter 8 Parameter and Function

8.1 Parameter list

P00-xx Motor and drive parameters

P01-xx Main control parameter

P02-xx Gain parameters

P03-xx Position parameters

P04-xx Velocity parameters

P05-xx Torque parameters

P06-xx I/O parameters

P08-xx Super function parameters

Type	Para code	Name	Setting Range	Default setting	unit	Setting way	Effective time
motor and driver parameter	P00-00	Motor number	0-65535	2000		Stop & reset	Re-power on
	P00-01	Motor rated speed	1-6000	---	rpm	Stop & reset	Re-power on
	P00-02	Motor rated torque	0.01-655.35	---	N.M	Stop & reset	Re-power on
	P00-03	Motor rated current	0.01-655.35	---	A	Stop & reset	Re-power on
	P00-04	Motor rotor inertia	0.01-655.35	---	kg.cm²	Stop & reset	Re-power on
	P00-05	motor pole pairs	1-31	---	Polar logarithm	Stop & reset	Re-power on
	P00-07	encoder selection	0-3	---	---	Stop &	Re-power

Motor and driver parameter						reset	on
	P00-08	Line-saving incremental encoder	0-1	---	---	Stop & reset	Re-power on
	P00-09	Absolute encoder type	0-1	---	---	Stop & reset	Re-power on
	P00-10	Incremental encoder lines	0-65535	---		Stop & reset	Re-power on
	P00-11	Incremental encoder Z pulse electrical angle	0-65535	---		Stop & reset	Re-power on
	P00-12	Rotor initial angle 1	0-360	---	1°	Stop & reset	Re-power on
	P00-13	Rotor initial angle 2	0-360	---	1°	Stop & reset	Re-power on
	P00-14	Rotor initial angle 3	0-360	---	1°	Stop & reset	Re-power on
	P00-15	Rotor initial angle 4	0-360	---	1°	Stop & reset	Re-power on
	P00-16	Rotor initial angle 5	0-360	---	1°	Stop & reset	Re-power on
	P00-17	Rotor initial angle 6	0-360	---	1°	Stop & reset	Re-power on
	P00-20	Display settings on power-on interface	0-100	100	---	Running & setting	Re-power on
	P00-21	RS232 Communication baud rate	0-3	2	---	Running & setting	Re-power on
	P00-23	Slave address	0-255	1	---	Running & setting	Re-power on
	P00-24	Modbus communication baud rate	0-7	2	---	Running & setting	Re-power on
	P00-25	check way	0-3	0	---	Running & setting	Re-power on

Motor and driver parameter	P00-26	Modbus communication response delay	0-100	0	1ms	Running & setting	Re-power on
	P00-28	Torque control Modbus communication compatible setting	0-2	1	---	Running & setting	Re-power on
	P00-29	Modbus absolute encoder feedback format	0-1	0	---	Running & setting	Re-power on
	P00-30	brake resistor setting	0-2	---	---	Running & setting	Re-power on
	P00-31	extra brake resistor power	0-65535	---	10W	Running & setting	Re-power on
	P00-32	Extra brake resistor value	0-1000	---	1Ω	Running & setting	Re-power on
	P00-33	check ENA for re-open circuit and re-short circuit	0-1	0	---	Running & setting	Re-power on
	P00-40	Over-heating protection	0-1	1	---	Stop & resetting	Re-power on
	P00-41	power off protection	0-1	1	---	Running &setting	Re-power on
	P00-46	Speed inconsistency alarm detection time setting	0-65535	0	1ms	Running & setting	Real time
Main control parameter	P01-01	control mode setting	0-6	0	---	Stop & resetting	Real time
	P01-02	Automatically tuning mode in real time	0-3	1	---	Running & setting	Real time
	P01-03	automatically tuning rigidity in real time	0-31	13	---	Running & setting	Real time

Main control parameter	P01-04	rotor inertial ratio	0-100.00	3	1times	Running & setting	Real time
	P01-10	control mode after over travel	0-1	1	---	Running & setting	Real time
	P01-20	Dynamic brake delay	0-250	50	1ms	Running & setting	Real time
	P01-21	disable dynamic brake when power off	0-1	1	---	Running & setting	Real time
	P01-22	disable dynamic brake when servo OFF	0-1	1	---	Running & setting	Real time
	P01-23	disable dynamic brake when alarming	0-1	1	---	Running & setting	Real time
	P01-24	Disable dynamic brake when over travel	0-1	1	---	Running & setting	Real time
	P01-30	brake command - servo OFF delay (brake ON delay)	0-255	50	1ms	Running & setting	Real time
	P01-31	brake output speed limitation	0-3000	100	1rpm	Running & setting	Real time
	P01-32	servo OFF brake command waiting time	0-255	50	1ms	Running & setting	Real time
	P01-40	out of control check ENA	0-1	1	---	Running & setting	Real time
Gain parameter	P02-00	position control gain 1	0-3000.0	48.0	1/S	Running & setting	Real time
	P02-01	Position control gain 2	0-3000.0	57.0	1/S	Running & setting	Real time
	P02-03	speed feed-forward gain	0-100.0	30.0	1.0%	Running & setting	Real time
	P02-04	Speed feed-forward smooth constant	0-64.00	0.5	1ms	Running & setting	Real time

Gain parameter	P02-10	speed ratio gain 1	1.0-2000.0	27.0	1Hz	Running & setting	Real time
	P02-11	Speed integral constant 1	0.1-1000.0	10.0	1ms	Running & setting	Real time
	P02-12	Fake differential feed-forward control ratio 1	0-100.0	100.0	1.0%	Running & setting	Real time
	P02-13	speed ratio gain 2	1.0-2000.0	27.0	1Hz	Running & setting	Real time
	P02-14	Speed integral constant 2	0.1-1000.0	1000.0	1ms	Running & setting	Real time
	P02-15	Fake differential feed-forward control ratio 2	0-100.0	100.0	1.0%	Running & setting	Real time
	P02-16	Speed integral error limit value	0-32767	25000	---	Stop & resetting	Real time
	P02-19	Torque feed-forward gain	0-30000	0	1.0%	Running & setting	Real time
	P02-20	Torque feed-forward smooth constant	0-64.00	0.8	1ms	Running & setting	Real time
	P02-30	Gain switching mode	0-10	7	---	Running & setting	Real time
	P02-31	Gain switching grade	0-20000	800	---	Running & setting	Real time
	P02-32	Gain switching lag	0-20000	100	---	Running & setting	Real time
	P02-33	Gain switching delay	0-1000.0	10.0	1ms	Running & setting	Real time
	P02-34	Position gain switching time	0-1000.0	10.0	1ms	Running & setting	Real time
	P02-40	Mode switch selection	0-4	0	---	Running &	Real

						setting	time
Gain parameter	P02-41	Mode switch selection	0-20000	10000	---	Running & setting	Real time
	P02-50	Torque command added value	-100.0-100.0	0	1.0%	Running & setting	Real time
	P02-51	CW torque compensation	0-100.0	0	1.0%	Running & setting	Real time
	P02-52	Reverse torque compensation	-100.0-0	0	1.0%	Running & setting	Real time
Position parameter	P03-00	Source of location command	0-1	0	---	Running & setting	Real time
	P03-01	Instruction pulse mode	0-3	1	---	Running & setting	Real time
	P03-02	Instruction Pulse Input Terminal	0-1	0	---	Running & setting	Real time
	P03-03	Instruction Pulse Inversion	0-1	0	---	Running & setting	Real time
	P03-04	Position Pulse filtering	0-1	0	---	Running & setting	Real time
	P03-05	Positioning completion criteria	0-2	1	---	Running & setting	Real time
	P03-06	Location complete range	0-65535	100	Encoder unit	Running & setting	Real time
	P03-07	Position Feedback format	0-1	0	---	Stop & reset	Real time
	P03-09	Number of instruction pulses per turn of	0-65535	10000	Pulse	Running & setting	Re-power on

		motor					
	P03-10	Electron Gear 1 molecule	1-65535	1	---	Running & setting	Re-power on
	P03-11	Electronic gear 1 Denominator	1-65535	1	---	Running & setting	Re-power on
	P03-12	Electron Gear 1 is 16-bit higher	0-32767	0	---	Running & setting	Re-power on
	P03-13	Electron Gear 2 molecule	1-65535	1	---	Running & setting	Re-power on
Position parameter	P03-14	Electronic gear 1 Denominator	1-65535	1	---	Running & setting	Re-power on
	P03-15	Excessive position deviation setting	0-65535	30000	指令单位*10	Running & setting	Real time
	P03-16	Position Instruction smoothing filter time constant	0-1000.0	0	1ms	Running & setting	Real time
	P03-20	Position loop feedback	0-1	0	---	Running & setting	Real time
Position parameter	P03-22	Increment encoder output pulse frequency division ratio molecule	1-65535	1	---	Running & setting	Real time
	P03-23	Increment encoder output pulse frequency division ratio denominator	1-65535	1	---	Running & setting	Real time
	P03-25	Absolute number of output pulses per revolution of the motor	0-60000	2500	---	Running & setting	Real time
	P03-30	Linear encoder inversion	0-1	0	---	Stop & reset	Real time

Position parameter	P03-31	The polarity of the LINEAR ENCODER Z pulse	0-1	1	---	Stop & reset	Real time
	P03-40	Source of output pulse	0-3	1	---	Stop & reset	Real time
	P03-42	Output Z pulse polarity	0-1	1	---	Stop & reset	Real time
	P03-45	Digital Position Instruction caching mode	0-1	0	---	Stop & reset	Real time
	P03-46	Maximum speed of motor at digital position command run time	0-6000	1000	---	Running & setting	Real time
	P03-50	The Gantry function enables	0-1	0	---	Stop & setting	Real time
	P03-51	The input signal of Gantry function is reversed	0-1	0	---	Stop & setting	Real time
	P03-52	Number of feedback pulses per turn of Gantry Motor	0-65535	10000	---	Running & setting	Re-power on
	P03-53	Gantry function position deviation too large settings	0-65535	10000	---	Running & setting	Real time
	P03-55	Gantry proportional gain	0-200	10	---	Running & setting	Real time
	P03-60	Origin regression enable control	0-6	0	---	Running & setting	Real time
	P03-61	Origin regression model	0-9	0	---	Running & setting	Real time
	P03-65	High speed searching	0-1000	100	---	Running &	Real

		for origin switch				setting	time
	P03-66	Low speed searching for origin switch	0-200	10	---	Running & setting	Real time
	P03-67	Search origin switch acceleration and deceleration time	0-5000	0	---	Running & setting	Real time
Position parameter	P03-68	Maximum time limit for searching origin	0-65550	0	---	Running & setting	Real time
	P03-69	HMechanical Origin Offset H	0-65535	0	---	Running & setting	Real time
	P03-70	Mechanical Origin Offset L	0-65535	0	---	Running & setting	Real time
	P04-00	Speed instruction source	0-3	0	---	Stop & setting	Real time
	P04-01	Speed instruction analog counter	0-1	0	---	Stop & setting	Real time
	P04-02	Digital speed given value	-6000—6000	0	1rpm	Running & setting	Real time
Speed parameter	P04-03	Zero speed position clamp function	0-1	0	---	Running & setting	Real time
	P04-04	Zero speed position clamp speed threshold	0-6000	30	1rpm	Running & setting	Real time
	P04-05	Overspeed alarm value	0-6500	6400	1rpm	Running & setting	Real time
	P04-06	Forward speed limit	0-6000	5000	1rpm	Running & setting	Real time
	P04-07	Reverse speed limit	-6000-0	-5000	1rpm	Running & setting	Real time
	P04-10	Zero velocity detection value	0-200.0	2	1rpm	Running & setting	Real time
	P04-11		0-200.0	30	1rpm	Running &	Real

		Rotation detection value				setting	time
Speed parameter	P04-12	Consistent range of velocity	0-200.0	30	1rpm	Running & setting	Real time
	P04-14	Acceleration time	0-10000	0	1ms/1000rpm	Running & setting	Real time
	P04-15	Deceleration time	0-10000	0		Running & setting	Real time
	P04-30	Internal setting speed 1	-6000—6000	0	1rpm	Running & setting	Real time
	P04-31	Internal set speed 2	-6000—6000	0	1rpm	Running & setting	Real time
	P04-32	Internal setting speed 3	-6000—6000	0	1rpm	Running & setting	Real time
	P04-33	Internal set speed 4	-6000—6000	0	1rpm	Running & setting	Real time
	P04-34	Internal set speed 5	-6000—6000	0	1rpm	Running & setting	Real time
	P04-35	Internal set speed 6	-6000—6000	0	1rpm	Running & setting	Real time
	P04-36	Internal set speed 7	-6000—6000	0	1rpm	Running & setting	Real time
	P04-37	Internal set speed 8	-6000—6000	0	1rpm	Running & setting	Real time
Torque parameter	P05-00	Torque instruction source	0-3	0	---	Stop & setting	Real time
	P05-01	Inverse Torque instruction analog	0-1	0	---	Stop & setting	Real time
	P05-02	Torque mode speed limit given value	0-5000	1500	1rpm	Running & setting	Real time

Torque parameter	P05-03	Digital torque given value	0-300.0	0	1.0%	Running & setting	Real time
	P05-05	Torque limiter source	0-2	0	---	Stop & setting	Real time
	P05-06	Torque limit check out delay	0-10000	0	ms	Running & setting	Real time
	P05-10	Internal Forward Torque limit	0-300.0	200.0	1.0%	Running & setting	Real time
	P05-11	Internal reverse torque limit	-300-0	-200.0	1.0%	Running & setting	Real time
	P05-12	External Positive Torque limit	0-300.0	100.0	1.0%	Running & setting	Real time
	P05-13	External Reverse torque limit	-300-0	-100.0	1.0%	Running & setting	Real time
I/O parameter	P06-00	DI1 Effective level of input port	0-4	0	---	Running & setting	Re-power on
	P06-01	DI1 input port function selection (Servo ON)	0-24	1	---	Running & setting	Re-power on
	P06-02	DI2 Effective level of input port	0-4	0	---	Running & setting	Re-power on
	P06-03	DI2 input port function selection (alarm clear)	0-24	2	---	Running & setting	Re-power on
	P06-04	DI3 Effective level of input port	0-4	0	---	Running & setting	Re-power on
	P06-05	DI3 input port function selection (forward overtrip)	0-24	3	---	Running & setting	Re-power on
	P06-06	DI4 Effective level of input port	0-4	0	---	Running & setting	Re-power on
	P06-07	DI4 input port function	0-24	4	---	Running &	Re-power

		selection (reverse overtrip)				setting	on
	P06-08	DI5 Effective level of input port	0-4	0	---	Running & setting	Re-power on
	P06-09	DI5 input port function selection(Default: Forward torque external torque limit)	0-24	7	---	Running & setting	Re-power on
I/O parameter	P06-10	DI6 Effective level of input port	0-4	0	---	Running & setting	Re-power on
	P06-11	DI6 input port function selection (Default: External torque limit on reverse side)	0-24	8	---	Running & setting	Re-power on
	P06-12	DI7 Effective level of input port	0-4	0	---	Running & setting	Re-power on
	P06-13	D17 input port function selection (Default: function model change)	0-24	5	---	Running & setting	Re-power on
	P06-16	DI8 Effective level of input port	0-4	0	---	Running & setting	Re-power on
	P06-17	D17 input port function selection (Default:position instruction clear)	0-24	16	---	Running & setting	Re-power on
	P06-20	D01 Valid level of output port	0-1	1	---	Running & setting	Re-power on
	P06-21	D01 Function change of output port (fault:serve ready)	0-13	3	---	Running & setting	Re-power on

I/O parameter	P06-22	DO2 Valid level of output port	0-1	1	---	Running & setting	Re-power on
	P06-23	DO2 Function change of output port (fault: brake open)	0-13	2	---	Running & setting	Re-power on
	P06-24	DO3 Valid level of output port	0-1	1	---	Running & setting	Re-power on
	P06-25	DO3 Function change of output port (fault:Alarm output)	0-13	1	---	Running & setting	Re-power on
	P06-26	DO4 Valid level of output port	0-1	1	---	Running & setting	Re-power on
	P06-27	DO4 Function change of output port (fault:position completed)	0-13	4	---	Running & setting	Re-power on
	P06-28	DO5 Valid level of output port	0-1	1	---	Running & setting	Re-power on
	P06-29	DO5 Function change of output port (fault:check out torque limited)	0-13	8	---	Running & setting	Re-power on
	P06-40	Speed analog command input gain	10-2000	300	1rpm/V	Running & setting	Real time
	P06-41	Speed analog command filter constant	0-64.00	0.8	1ms	Running & setting	Real time
	P06-42	Speed analog command offset	-10.000 —10.000	0	1V	Running & setting	Real time
	P06-43	Torque analog command gain	0.0-100.0	10	%	Running & setting	Real time
	P06-44	Torque analog command	0-64.00	0.8	1ms	Running &	Real

		filter constant				setting	time
I/O parameter	P06-45	Torque analog command offset	-10.000 －10.000	0	1V	Running & setting	Real time
	P06-46	Speed analog instruction dead zone	0-10.000	0	1V	Running & setting	Real time
	P06-47	Torque analog instruction dead zone	0-10.000	0	1V	Running & setting	Real time
Advanced function parameter	P08-01	Load rotation routine identification mode	0-1	0	---	Running & setting	Real time
	P08-02	Maximum speed of inertia identification	100-2000	800	1rpm	Running & setting	Real time
	P08-03	Inertia identification acceleration and deceleration time	20-800	100	1ms	Running & setting	Real time
	P08-04	Wait time after single inertia identification is completed	50-10000	1000	1ms	Running & setting	Real time
	P08-05	The number of motor rotations required to complete a single inertia		1.33	圈	Running & setting	Read only
	P08-11	Adaptive notch mode selection	0-4	0	---	Running & setting	Real time
	P08-13	Vibration detection threshold of adaptive notch filter	1-7	3	---	Running & setting	Real time
	P08-17	Speed monitor	0-2	0		Running & setting	Real time
	P08-19	Feedback speed low-pass filter constant	0-25.00	0.8	1ms	Running & setting	Real time

Advanced function parameter	P08-20	Torque command filter constant1	0-25.00	0.8	1ms	Running & setting	Real time
	P08-21	Torque command filter constant2	0-25.00	0.8	1ms	Running & setting	Real time
	P08-25	Disturbance torque compensation gain	0-100.0	0	%	Running & setting	Real time
	P08-26	Disturbance torque filtering time constant	0-25.00	0.8	1ms	Running & setting	Real time
	P08-30	Notch Filter 1 frequency	300-5000	5000	HZ	Running & setting	Real time
	P08-31	Notch Filter 1 width	0-20	2	---	Running & setting	Real time
	P08-32	Notch Filter 1 depth	0-99	0	---	Running & setting	Real time
	P08-33	Notch Filter 2 frequency	300-5000	5000	HZ	Running & setting	Real time
	P08-34	Notch Filter 2 width	0-20	2	---	Running & setting	Real time
	P08-35	Notch Filter 2 depth	0-99	0	---	Running & setting	Real time
	P08-36	Notch Filter 3 frequency	300-5000	5000	HZ	Running & setting	Real time
	P08-37	Notch Filter 3 width	0-20	2	---	Running & setting	Real time
	P08-38	Notch Filter 3 depth	0-99	0	---	Running & setting	Real time
	P08-39	Notch Filter 4 frequency	300-5000	5000	HZ	Running & setting	Real time
	P08-40	Notch Filter 4 width	0-20	2	---	Running & setting	Real time

Advanced function parameter	P08-41	Notch Filter 4 depth	0-99	0	---	Running & setting	Real time

8.2 Parameter Description

8.2.1 P00-XX motor and driver parameter

Para code	Name	Description
P00-00	motor number	Default set 0: P0-01 to P0-17 is available 2000: Absolute encoder, P0-01 to P0-05 identified by driver
P00-01	rated speed	Set range: 1~6000 rpm; unit：rpm; default value.
P00-02	rated torque	Set range 0.01-655.35 N.m;unit：N.M default value.
P00-03	Rated current	Set range: 0.01-655.35A,unit：A Default value
P00-04	Rotor inertia	Set range: 0.01-655.35kg.cm^2 ; unit：kg.cm^2 Default value
P00-05	Pole pairs	Set range:1-31 pairs; unit：对极 Default value
P00-07	Encoder option	Range: 0-3 0&1: incremental encoder 2: Single-turn absolute encoder 3: Multi-turn absolute encoder
P00-08	Line-saving incremental encoder	Range: 0-1 0: non line-saving; 1: line-saving;
P00-09	Absolute encoder	Range: 0-1 0: Tamagawa encoder

		1: Nikon encoder
P00-10	Incremental encoder lines	Default set
P00-11	incremental encoder Z pulse electric angle	Default set
P00-12	Rotor initial angle 1	Default set
P00-13	Rotor initial angle 2	Default set
P00-14	Rotor initial angle 3	Default set
P00-15	Rotor initial angle 4	Default set
P00-16	Rotor initial angle 5	Default set
P00-17	Rotor initial angle 6	Default set
P00-20	Display settings on power-on interface	Set range:0-100; Default:100. Set by customer It shows operation status while driver power-on if set value to 100. Other parameter refer to 8.3 chapter. For example: If want driver show d08.F.SP, please set value to 8.
P00-21	RS232 communication baud rate selection	Set range: 0-3; Default:2 Choose baud rate to communicate with PC: 0：9600 1：19200 2：57600 3：115200
P00-23	slave station	Set range: 0-255; Default:1; Set according to device required.
P00-24	Modbus communication baud rate	Set range: 0-7; Default: 2. 0:2400 4:38400 1:4800 5:57600 2:9600 6:115200 3:19200 7:25600

P00-25	Calibration method	Set range: 0-3; Default: 0. 0: no calibration, 2 stop bit. 1: even calibration, 1 stop bit. 2: odd calibration, 1 stop bit. 3.no calibration, 1 stop bit.
P00-26	modbus Communication response delay	Set range: 0-100; default:0. Response standard while set value is 0; And will response related to the value while it be set.
P00-28	Modbus compatible	Set range:0-2; Default:1. 0: Reserve. 1: default 2: Compatible with Chisu protocol （OX11and 16E address）
P00-29	Modbus absolute encoder feedback style	set range: 0-1; default: 0. Read absolute position value 84D/84E. 0: 84D is cycle amount. 84E is single cycle amount. 1: 84D is single cycle amount. 84E is cycle amount.
P00-30	Braking resistor setting	Set range: 0-2. 0: inside resistor. 1: use outside resistor. 2: No braking resistor.
P00-31	Outsider braking resistor power	Setting range: 0-65536, Unit: 10W. Set value according to outsider braking resistor. For example: set 4, it means resistor power is 40W.
P00-32	Outsider braking resistor value	Setting range :0-1000 Unit: ohm. Set value according to outsider braking resistor
P00-33	regeneration open circuit, Short-circuit detection enable	Setting range: 0-1; 0: Close regeneration open-circuit 1: Open regeneration open-circuit,short-circuit detection enable.
P00-40	Over temperature protection setting	Setting range: 0-1 0: Close over temperature protection

		1: Open over temperature protection
P00-41	Control power failure protection settings	Setting range: 0-1 0: Close control power failure protection 1: Open control power failure protection
P00-46	Speed inconsistency alarm detection time setting	Setting range: 0-65536; Unit: ms. 0: Close speed inconsistency alarm detection function. 1-65535: Speed inconsistency alarm detection time setting, When the speed error reaches P04-12 set value, and the time reaches the set time, the drive will alarm AL.423

8.2.2 P01-xx Major control parameter

<table>
<tr><th>Para code</th><th>Name</th><th>Description</th></tr>
<tr><td>P01-01</td><td>Control mode setting</td><td>Setting range:0-6
0: Position control mode.
1: Speed control mode.
2: Torque control mode
3:Speed, torque control mode. Need to use an external input port in CN1 to switch, set the selected DI port input port function selection to 5 (control mode switching). Control the logic state of the port to switch the control mode.
<table>
<tr><td>Port logic</td><td>Control mode</td></tr>
<tr><td>Valid</td><td>Speed mode</td></tr>
<tr><td>Invalid</td><td>Torque mode</td></tr>
</table>
4：Position and speed control mode. Need to use an external input port in CN1 to switch, set the selected DI port input port function selection to 5 (control mode switching). Control the logic state of the port to switch the control mode.
<table>
<tr><td>Port logic</td><td>Control mode</td></tr>
<tr><td>Valid</td><td>Position mode</td></tr>
</table></td></tr>
</table>

<table>
<tr><td>P01-01</td><td>Control mode setting</td><td>
<table>
<tr><td>Invalid</td><td>Speed mode</td></tr>
</table>
5：Position and torque control mode. Need to use an external input port in CN1 to switch, set the selected DI port input port function selection to 5 (control mode switching). Control the logic state of the port to switch the control mode.
<table>
<tr><td>Port logic</td><td>Control mode</td></tr>
<tr><td>Valid</td><td>Position mode</td></tr>
<tr><td>Invalid</td><td>Torque mode</td></tr>
</table>
6：servo electric screwdriver</td></tr>
<tr><td>P01-02</td><td>Real time automatic adjustment mode</td><td>Setting range:0-2
0: Manual adjustment of rigidity
1：Standard mode automatically adjusts rigidity. In this mode, parameters P02-00, P02-01, P02-10, P02-11, P02-13, P02-14, P08-20 will be set automatically according to the stiffness level set by P01-03, and these parameters can not be adjusted by manual. The following parameters are set by the user:
P02-03 (speed feedforward gain), P02-04 (speed feedforward smoothing constant).
2：Positioning mode automatically adjusts rigidity. In this mode, parameters P02-00, P02-01, P02-10, P02-11, P02-13, P02-14, P08-20 will be set automatically according to the rigidity level set by P01-03. and these parameters can not be adjusted by manual.. The following parameters will be fixed and cannot be changed:
P02-03 (speed feedforward gain), 30%
P02-04 (speed feedforward smoothing constant).0.5
3：Automatically adjust the rigidity 2. In this mode, parameters P02-00, P02-01, P02-10, P02-11, P02-13 will be set automatically according to the rigidity level set in P01-03.
The following parameters are set by the user: P02-03 (speed feedforward gain), P02-14 (speed integral constant 2), P08-20 (torque command filter constant 1), P08-21 (torque command filter constant 2)</td></tr>
<tr><td>P01-03</td><td>Automatically adjust the rigidity setting</td><td>Setting range: 0-31
Built-in 32 kinds of gain parameters. It works when P01-02 is set to 1, 2, or</td></tr>
</table>

		3. It can be called directly according to the actual situation. The larger the set value, the stronger the rigidity.
P01-04	Rotor inertia ratio	Setting range: 0-100, unit: times Set the load inertia ratio to related motor. The setting method is as follows: P01-04 = Load inertia / motor inertia This inertia ratio can use the value after AF-J-L automatic inertia recognition, write the recognized value into the parameter
P01-10	Control method after overtravel	Setting range: 0-1 0: The motor is in a free state after overtravel, and only receives signals running in the opposite direction 1: The motor is locked after overtravel and only receives signals in the opposite direction.
P01-20	Dynamic brake delay	Setting range:0-150, Unit:ms. When the braking conditions are met, the dynamic brake action delay time
P01-21	Disable dynamic brake when main power is off	Setting range: 0-1; 0: Open dynamic brake function 1: Close dynamic brake function
P01-22	Disable dynamic brake when servo OFF.	Setting range: 0-1 0: Open dynamic brake function; 1: Close dynamic brake function.
P01-23	Disable dynamic brake when fault alarm.	Setting range: 0-1 0: Open dynamic brake function; 1: Close dynamic brake function.
P01-24	Disable dynamic brake when overtravel	0-1 Setting range: 0-1 0: Open dynamic brake function; 1: Close dynamic brake function.
P01-30	Brake command-Servo OFF delay time (brake	Setting range: 0-255, unit: ms When enabling: The drive will only receive the position command after the time of P01-30 is executed under the enable command is executed.

	open delay)	When the enable is off: When the motor is at a static state, after the close enable command is executed, the time after the brake is closed and the motor becomes non-energized.
P01-31	Speed limit value of brake command output	Setting range: 0-3000, unit: rpm Motor speed threshold when the brake output is active when the motor is rotating. Less than this threshold, the brake output command is valid, otherwise it will wait for P01-32 time, the brake output command is valid.
P01-32	Servo OFF-brake command waiting time	Setting range: 0-255, unit: ms The maximum waiting time for the brake output when the motor is rotating.
P01-40	Runaway detection enabled	Prevent the motor from running out of control and abnormal rotation. 0: Close enable. 1: Open enable.

8.2.3 P02-xx Gain assorted parameter

Para code	Name	Description
P02-00	Position control gain 1	Setting range: 0-3000.0, unit: 1 / S Position loop regulator scale gain. The larger the parameter value set, the higher the gain ratio is, the greater the stiffness is, the smaller the position tracking error will be, and the faster the response. However, too large a parameter can easily cause vibration and overshoot. This parameter is for steady state response.
P02-01	Position control gain2	Setting range: 0-3000.0, unit: 1 / S Position loop regulator scale gain. The larger the parameter value set, the higher the gain ratio is, the greater the stiffness is, the smaller the position tracking error will be, and the faster the response. However, too large a parameter can easily cause vibration and overshoot. This parameter is for dynamic response.
P02-03	Speed feedforward gain	Setting range: 0-100.0, unit: 1.0% The feedforward gain of the speed loop. The larger the parameter value

		set, the smaller the system position tracking error and the faster the response. However, if the feedforward gain is too large, the position loop of the system will be unstable, which will easily cause overshoot and vibration.
P02-04	Speed feedforward smoothing constant	Setting range: 0-64.00, unit: ms This parameter is used to set the speed loop feedforward filtering time constant. The larger the value set, the larger the filtering effect, but at the same time the phase lag increases.
P02-10	1Speed proportional gain 1	Setting range: 1.0-2000.0, unit: Hz The larger the speed proportional gain is, the larger the servo stiffness is and the faster the speed response is. However, if it is too large, it is easy to generate vibration and noise. Under the condition that the system does not oscillate, increase this parameter value as much as possible. This parameter is for a static response.
P02-11	Speed integral constant 1	Setting range: 1.0-1000, Unit: ms. Speed regulator integration time constant. The smaller the setting value, the faster the integration speed, the greater the stiffness, and the vibration is too easy to produce noise if it is too small. When the system does not oscillate, reduce this parameter value as much as possible. This parameter is for steady state response.
P02-12	Pseudo-differential feedforward control coefficient 1	Setting range: 0-100.0, unit: 1.0% When set to 100.0%, the speed loop adopts PI control, and the dynamic response is fast; when set to 0, the speed loop integral effect is obvious, which can filter low-frequency interference, but the dynamic response is slow. By adjusting this coefficient, the speed loop can have a better dynamic response, and it can increase the resistance to low-frequency interference.

P02-13	speed proportional gain2	Setting range: 1.0-2000.0, unit: Hz The larger the speed proportional gain is, the larger the servo stiffness is and the faster the speed response is. However, if it is too large, it is easy to generate vibration and noise. Under the system has no vibration, increase this parameter value as much as possible. This parameter is for dynamic response.
P02-14	Speed integral constant 2	Setting range: 1.0-1000.0, unit: ms Speed regulator integration time constant. The smaller the setting value, the faster the integration speed, the greater the stiffness is, and the vibration is too easy to produce noise if it is too small. Under the system has no vibration, reduce this parameter value as much as possible. This parameter is for dynamic response.
P02-15	Pseudo-differential feedforward control coefficient 2	Setting range: 0-100.0, unit: 1.0% When set to 100.0%, the speed loop PI control, and the dynamic response is fast; when set to 0, the speed loop integral effect is obvious, which can filter low-frequency interference, but the dynamic response is slow. By adjusting this coefficient, the speed loop can have a better dynamic response, and at the same time, it can increase the resistance to low-frequency interference.
P02-16	Speed integral error limit value	Setting range: 0-32767 Speed integral error limit value
P02-19	Torque feedforward gain	Setting range: 0-30000, unit: 1.0% Set the current loop feedforward weighting value. This parameter adds the current loop after weighting the differential of the speed command.
P02-20	Torque feed-forward smoothing constant	Setting range: 0-64.00, unit: ms This parameter is used to set the torque feedforward filtering time constant.

<table>
<tr><td>P02-30</td><td>Gain switching mode</td><td>Setting range: 0-10
The condition to set the 1st and 2nd gain switching mode
<table>
<tr><th>value</th><th>Switching condition</th><th>Remark</th></tr>
<tr><td>0</td><td>fix to the 1st gain</td><td>P02-00、P02-10、P02-11、P02-12</td></tr>
<tr><td>1</td><td>fix to the 2nd gain</td><td>P02-01、P02-13、P02-14、P02-15</td></tr>
<tr><td>2</td><td>Use DI input switching</td><td>Need to set the DI port to 9 (gain switching input)
Invalid: first gain
Effective: second gain</td></tr>
<tr><td>3</td><td>Big torque command value</td><td>When the torque command is greater than the threshold (determined by P02-31 and P02-32), it switches to the second gain. When it is less than the threshold and exceeds the P02-33 delay setting, it switches to the first gain.</td></tr>
<tr><td>4</td><td>Speed command changes a lot</td><td>When the speed command change is greater than the threshold (determined by P02-31 and P02-32), it switches to the second gain. When it is less than the threshold and exceeds the P02-33 delay setting, it switches to the first gain.</td></tr>
<tr><td>5</td><td>Big speed command value</td><td>When the speed command is greater than the threshold (determined by P02-31 and P02-32), it switches to the second gain. When it is less than the threshold and exceeds the P02-33 delay setting, it switches to the first gain.</td></tr>
<tr><td>6</td><td>Large</td><td>When the position deviation is greater than</td></tr>
</table></td></tr>
</table>

P02-30	Gain switching mode		position deviation	the threshold (determined by P02-31 and P02-32), switch to the second gain. When it is less than the threshold and exceeds the P02-33 delay setting, it switches to the first gain.
		7	There is position command	Switch to the second gain when there is a position command. When the position command ends and the P02-33 delay setting is exceeded, it switches to the first gain.
		8	Incomplete positioning	Switch to the second gain when positioning is not completed. When the positioning is completed and the P02-33 delay setting is exceeded, it switches to the first gain.
		9	Actual speed is big	Switch to the second gain when the actual speed is greater than the threshold (determined by P02-31 and P02-32). When it is less than the threshold and exceeds the P02-33 delay setting, it switches to the first gain.
		10	With position command + actual speed	Switch to the second gain when there is a position command. When there is no position command and the actual speed is less than the threshold (determined by P02-31 and P02-32), and when the delay setting of P02-33 is exceeded, it switches to the first gain.
P02-31	Gain switching level	Setting range: 0-20000 Judgment threshold when gain is switched. Torque unit: 1000bit = 25% of rated torque Speed unit: 1000bit = 200 rpm Position unit: 131072bit per revolution		

<table>
<tr><td>P02-32</td><td>Gain switching hysteresis</td><td>Setting range: 0-20000
Hysteresis level at gain switching
Torque unit: 1000bit = 25% of rated torque
Speed unit: 1000bit = 200 rpm
Position unit: 131072bit per revolution</td></tr>
<tr><td>P02-33</td><td>Gain switching delay</td><td>Setting range: 0-1000.0, unit: ms
When switching from the second gain to the first gain, the time from when the trigger condition is met to the actual switching.</td></tr>
<tr><td></td><td></td><td></td></tr>
<tr><td>P02-34</td><td>Position gain switching time</td><td>Setting range: 0-1000.0, unit: ms
Time for position control gain 1 to smoothly switch to position control gain 2</td></tr>
<tr><td>P02-40</td><td>Mode switch selection</td><td>Setting range: 0-4
Set the conditions of speed loop PI control and P control
<table>
<tr><th>value</th><th>Judge condition</th><th>Remark</th></tr>
<tr><td>0</td><td>Torque command</td><td>When the torque command is less than P02-41, the threshold is set to PI control, while it is bigger than P02-41, then set to P control.</td></tr>
<tr><td>1</td><td>Speend command</td><td>When the speed command is less than P02-41, the threshold is set to PI control. If the speed command is greater than P02-41, the threshold is set to P control.</td></tr>
<tr><td>2</td><td>Acceleration</td><td>When the acceleration is less than P02-41, the threshold is set to PI control. If the acceleration is greater than P02-41, the threshold is set to P control.</td></tr>
<tr><td>3</td><td>Position deviation</td><td>When the position deviation is less than P02-41, the threshold is set to PI control. If the position deviation is greater than</td></tr>
</table></td></tr>
</table>

				P02-41, the threshold is set to P control.
		4	Modeless switch	Speed loop maintains PI control and no longer switches
P02-41	Mode switch level	Setting range: 0-20000 Set the threshold for switching. Torque unit: 1000bit = 25% of rated torque Speed unit: 1000bit = 200 rpm Position unit: 131072bit per revolution		
P02-50	Torque command added value	Setting range: -100.0-100, unit: 1.0% Valid in position control mode. This value is superimposed on the torque reference value and is used for vertical axis static torque compensation.		
P02-51	Forward torque compensation	Setting range: -100.0-100.0, unit: 1.0% Valid in position control mode. For compensating forward static friction		
P02-52	Reverse torque compensation	Setting range: -100.0-100.0, unit: 1.0% Valid in position control mode. Used to compensate reverse static friction		

8.2.4 P03-xx Position parameters

Para code	Name	Description
P03-00	Source of position command	0：pulse command 1：Given the number, use it when communicating with control
P03-01	Command pulse mode	0：Quadrature pulse command (90° phase difference two-phase pulse) 1： Direction+ pulse command 2or 3:Double pulse command（CW+CCW）
P03-02	Instruction Pulse Input Terminal	Use to specify the pulse input port in the CN1 port 0：low speed pulse port 1：high speed pulse port
P03-03	Instruction Pulse Inversion	Used to adjust the direction of the pulse instruction count 0：Normal 1：In The Opposite Direction

P03-04	Position Pulse filter setting	Set range : 0-1 Unit 0：0.1us。 1：1.6us
P03-05	Positioning completion criteria	0:Output when position deviation is less than P03-06 setting value 1: Output when position is given, and output when position deviation is less than P03-06 setting value 2: Output when position is given (after filtering) , and output when position deviation is less than P03-06 setting value
P03-06	Location complete range	Set range:0-65535 Unit: encoder unit Use to set a threshold value for positioning completion output. When the absolute value motor is used, the encoder is calculated at 131072 bit per turn. Using incremental encoder motor, each turn is calculated by the number of encoder lines * 4.
P03-07	Position feedback format	Set range:0-1 0：Incremental format 1：Multi-loop absolute value format
P03-09	Number of instruction pulses per turn of motor	Setting range: 0-65535 Absolute encoder motor is effectively used to set motor rotation number of instructions pulse. When this parameter is set to 0, P03-10 and P03-11 are valid
P03-10	Electron Gear 1 molecule	When absolute value motor is used, see 6.1.3 example of calculation method of electronic gear ratio $G=\frac{\text{Molecule}}{\text{Denominator}}=\frac{C\times 4}{P}$ Calculation formula of electronic gear ratio of incremental motor: C: Encoder line；P: No.of input pulse per turn Example : The number of encoder lines is 2500; The number of input pulse per turn; Find the ratio of electronic gear ? $G=\frac{C\times 4}{P}=\frac{2500\times 4}{3200}=\frac{10000}{3200}=\frac{25}{8}$ Note：20BThe molecule of encoder is 131072 17B The molecule of encoder is 160000
P03-11	Electronic gear 1 Denominator	

P03-12	Electron Gear 1 molecular high position	Set range :0-32767 Use this can expand the Electronic gear ratio Molecule value=P03-12*10000+P03-10
P03-13	Electronic gear. 2 molecules	See P03-10
P03-14	Electronic gear. 2 Denominator	See P03-11
P03-15	Position deviation setting is too big	Setting range: 0-65535, Unit: Instruction Unit * 10 set the number of pulse to allow deviation, more than the set value will alarm. EXAMPLE: Setting a value of 20, the drive alerts Al. 501 when the follow deviation exceeds 20 * 10(position deviation is too large)
P03-16	Position Instruction smoothing filter constant	Setting range: 1000, in Ms Setting time constant of position instruction smoothing filter
P03-20	Position feedback source	Setting Position Feedback Source 0: Encoder 1: Raster scale
P03-22	Increment encoder output pulse frequency division ratio molecule	When using incremental encoder, set the number of output pulses of cN1 port. P03-23 should be less than or equal to p03-22, calculation formula: $G=\frac{\text{Molecule}}{\text{Denominator}}=\frac{C\times 4}{P\times 4}$ C: Encoder line P: Desired output A, B pulses per revolution Example: The number of encoder lines is 2500; The number of A, B pulses per revolution is 500 ; $G=\frac{C\times 4}{P\times 4}=\frac{2500\times 4}{500\times 4}=\frac{5}{1}$
P03-23	Delta encoder output pulse frequency divider	

P03-25	Absolute number of output pulses per revolution of the motor	Set Range: 0-60000 Set absolute value motor rotation around, A, B frequency pulse output number. EXAMPLE: set the value of 2500, then each rotation of the motor, A and B signal output 2500 pulses
P03-30	LINEAR encoder	Set the grating ruler Input A, b phase sequence is reversed NO yes
P03-31	Polarity of Z pulse of linear encoder	Set the effective level of grating ruler input Z signal 0: low level 1: High level
P03-40	Output pulse source	Set CN1 terminal in the frequency-division Output Signal Source 0: Pulse output, alarm not output 1: Motor output 2: Pulse Output 3: Grating Ruler
P03-42	Output Z pulse Polarity	Set CN1 TERMINAL FREQUENCY OUTPUT SIGNAL Z effective level 0: Low Level 1: High Level
P03-45	Digital quantity instruction cache mode	Setting range: 0-1 0: No caching (immediate execution) 1: CACHING (new data executed after last data execution)
P03-46	Maximum speed of motor at digital position command run time	Setting range: 0-6000 Sets the maximum speed of the motor when the Digital Position Command runs

8.2.5 P04-xx Speed parameter

Para code	Name	Description
P04-00	Speed instruction source	0: External Analog Instruction 1: Digital Instruction (Parameter Setting)

		2: Digital Instruction (Communication) 3: Internal Multiple instruction sets
P04-01	Speed instruction analog reverse	The polarity relation used to adjust analog quantity is 0: Normal 1: Polarity is reversed
P04-02	Digital speed given value	Setting range:-6000-6000，Unit: rpm when P04-00 is set to 1, P04-02 is the speed control setting
P04-03	Zero speed position clamp function	0: non-position Clamp Function 1: Position Clamp function When speed control mode is applied and the following conditions are met, enter Position lock mode A: P04-03 set to 1 B: Speed instruction absolute value less than P04-04 SET THRESHOLD C: External Input Port function set to 10(zero fixed) and in input valid state
P04-04	Zero speed position clamp speed threshold	]Setting range: 0-6000, unit: rpm Setting speed instruction threshold to trigger zero speed position clamp function
P04-05	Over speed alarm value	Set range ：0-6500，Unit：rpm Setting the maximum allowable RPM above the setting will trigger a 420 overspeed alarm
P04-06	Forward speed limit	Set range：0-6000，Unit：rpm Limit forward speed of motor
P04-07	Reverse speed limit	Set range：-6000-0，Unit：rpm Limit reverse speed of motor
P04-10	Zero velocity detection value	Set range：0-200.0，Unit：rpm Set Zero speed detection threshold, motor speed below the threshold can be output through the output port "zero speed motor output" signal
P04-11	Rotation detection value	Set range：0-200.0，Unit：rpm Set Motor rotation detection threshold, motor rotation speed higher than

<table>
<tr><td></td><td></td><td>the value can be displayed through the LED panel status</td></tr>
<tr><td>P04-12</td><td>Consistent range of velocity</td><td>Set range：0-200.0，Unit：rpm
Set speed consistent signal threshold value, when motor speed and instruction speed difference in the threshold value range, can output "speed consistent output" signal through the output port</td></tr>
<tr><td>P04-14</td><td>Acceleration time</td><td>Set range：0-10000，Unit：1ms/1000rpm
Set the acceleration time in speed control</td></tr>
<tr><td>P04-15</td><td>deceleration time</td><td>Set range：0-10000，Unit：1ms/1000rpm
Set the deceleration time in speed control</td></tr>
<tr><td>P04-30

P04-37</td><td>1-8 inside speed set</td><td>Set range：-6000—6000，Unit：rpm
Parameters P04-30 to P04-37, respectively set internal speed 1 to internal speed 8, the internal speed switch method is as follows: when the speed loop control, P04-00 SET 3, the corresponding input port function is defined as 13,14,15 internal rotation speed switching, which is realized by setting the input port function to 13,14,15 on-off state combination, as shown in the following table
<table>
<tr><td>DI13</td><td>DI14</td><td>DI15</td><td>Parameter</td></tr>
<tr><td>0</td><td>0</td><td>0</td><td>P04-30</td></tr>
<tr><td>1</td><td>0</td><td>0</td><td>P04-31</td></tr>
<tr><td>0</td><td>1</td><td>0</td><td>P04-32</td></tr>
<tr><td>1</td><td>1</td><td>0</td><td>P04-33</td></tr>
<tr><td>0</td><td>0</td><td>1</td><td>P04-34</td></tr>
<tr><td>1</td><td>0</td><td>1</td><td>P04-35</td></tr>
<tr><td>0</td><td>1</td><td>1</td><td>P04-36</td></tr>
<tr><td>1</td><td>1</td><td>1</td><td>P04-37</td></tr>
</table></td></tr>
</table>

8.2.6 P05-xx Torque parameter

Para code	Name	Description
P05-00	Torque instruction source	0: External Analog Instruction (speed limit set by P05-02) 1: Digital Instruction (speed limit set by P05-02)

		2: External Analog Instruction (speed limit set by speed analog instruction) 3: Digital Instruction (speed limit set by speed analog instruction)
P05-01	Inverse Torque instruction analog	Used to adjust the Torque Direction 0: Normal 1: Direction reverse
P05-02	Torque mode speed limit given value	Setting range: 0-maximum speed, unit: RPM set the maximum speed of motor when torque mode, prevent no-load motor speed too high cause mechanical damage torque control mode effective
P05-03	Digital Torque given value	Setting range:-300-300, unit% P05-03 is the initial value for digital torque when P05-00 is set to 1
P05-05	Torque limiter source	Source for adjusting Torque Limits 0: Internal Digital (set by P05-10, P05-11 or P05-12, P05-13)1: External Analog (given by external analog input T-REF). In this mode, the positive and negative limits are the same. 2: The torque limit is limited by the parameter P05-03
P05-06	Torque limit check out delay	Setting range: 0-10000, unit: Ms Setting DO port output torque limit detection output signal delay time
P05-10	Internal Forward Torque limit	Setting range: 0-300.0, unit: 1.0% limit motor forward output, 100 means 1 times Torque, 300 means 3 times torque when the torque output reaches the limit value, the output signal can be detected through DO port output torque limit
P05-11	Internal reverse torque limit	Setting range:-300.0-0, unit: 1.0% limit motor reverse output, 100 means 1 times Torque, 300 means 3 times torque when the torque output reaches the limit value, the output signal can be detected through the DO port output torque limit
P05-12	External Positive Torque limit	Setting range: 0-300.0, unit: 1.0% This function, you need to use one of the external input port in CN1 to

<table>
<tr><td></td><td></td><td>switch, the choice of the Di port input port function set to 7(positive side external torque limit) . The control mode can be switched by controlling the logical state of the port.
<table>
<tr><td>Port logic</td><td>Torque limited value</td></tr>
<tr><td>Valid</td><td>External Limited value P05-12</td></tr>
<tr><td>Invalid</td><td>Internal Limited value P05-10</td></tr>
</table>
If the DI function is not assigned, the system default torque limit value is P05-10. When the torque output reaches the limit value, the output signal can be detected through the DO port output torque limit</td></tr>
<tr><td>P05-13</td><td>External reverse Torque limit</td><td>Setting range: 0-300.0, unit: 1.0%
This feature requires the use of an external input port in CN1 to switch, the choice of the DI port input port function set to 8(reverse side external torque limit) . The control mode can be switched by controlling the logical state of the port.
<table>
<tr><td>Port logic</td><td>Torque limited value</td></tr>
<tr><td>Valid</td><td>External Limited value P05-13</td></tr>
<tr><td>invalid</td><td>Internal Limited value P05-11</td></tr>
</table>
If the DI function is not assigned, the default torque limit amplitude of the system is p05-11.When the torque output reaches the limit value, the output signal can be detected through the Do port output torque limit</td></tr>
</table>

8.2.7 P06-xx I/O Parameter

Para code	Name	Description
P06-00	DI1Effective level of input	Set range：0-4，Factory set:0

	port	Set valid input of di1 input port of cN1 0: valid for low level (optocoupler on) 1: Valid for high level (optocoupler off) 2: Rising edge effective 3: Falling edge effective 4: Both rising and falling edge are effective
P06-01	DI1 Input Port function selection	Set range：0-24，Factory set: 1 servo ON Set the function of di1 input port of cN1 0: invalid pin 1: servo ON 2: Alarm clear 3: Forward over travel signal input 4: Reverse over travel signal input 5: Control mode switching 6: Electronic gear input 7: Positive side external torque limit 8: Reverse side external torque limit 9: Gain switching input 10: Zero fixed input 11: Command pulse inhibit input 12: Encoder absolute value data required input 13: Internal set speed switch input 1 14: Internal set speed switch input 2 15: Internal set speed switch input 3 16: Position command clear input 17: Pole detection input 18: Command pulse input rate switching input 19: Gantry simultaneous movement enable 20: Gantry alignment clear signal 21: origin switch signal 22: origin reset start signal 23: speed analog command direction input

		24: torque analog command direction input
P06-02	DI2Effective level of input port	see P06-00
P06-03	DI2 Function choose of input port	see P06-01，factory set：2 Alarm clear
P06-04	DI3 Valid power level of input port	seeP06-00
P06-05	DI3 Function choose of input port	seeP06-01， factory set：3 Forward overflight signal input
P06-06	DI4 Effective level of input port	see 06-00
P06-07	DI4 Function choose of input port	see P06-01， factory set：4 reverse overflight signal input
P06-08	DI5 Effective level of input port	see P06-00
P06-09	DI5 Function choose of input port	see P06-01，factory set：7 Forward turning external torque limit
P06-10	DI6 Effective level of input port	see P06-00
P06-11	DI6 Function choose of input port	see P06-01， factory set：8 Reverse turning external torque limit
P06-12	DI7 Effective level of input port	see P06-00
P06-13	DI7 Function choose of input port	see P06-01，factory set：5 Control mdoe swift
P06-16	DI8 Effective level of input port	see P06-00
P06-17	DI8 Function choose of input port	see P06-01， factory set ：16 Position command zero input
P06-20	DO1 Effective level of input port	Set range：0-1， factory set:1 0: When the State is valid, optocoupler cut-off

		1: When the State is valid, optocoupler on
P06-21	DO1 Function choose of input port	Set range：0-13，factory set：3 Servo ready for output 0: Pin Invalidation 1: Alarm output 2: Lock Open Output 3: Servo Ready Output 4: Positioning Completed Output 5: Positioning close to output 6: Speed consistent output 7: Motor Zero speed output 8: Torque limit detected output 9: Speed limit detected output 10: Warning output 11: Instruction Pulse Input Rate Switching output 12: origin regression complete output 13: electrical origin regression complete output
P06-22	DO2 Effective level of input port	see P06-20
P06-23	DO2 Function choose of output port	see P06-21，factory set：2 Brake open output
P06-24	DO3 Function choose of output port	see P06-20
P06-25	DO3 Function choose of output port	see P06-21，factory set：1 Alarm output
P06-26	DO4 Function choose of output port	see P06-20
P06-27	DO4 Function choose of output port	see P06-21，factory set：4 Location complete output
P06-28	DO5 Function choose of output port	see P06-20
P06-29	DO5 Function choose of	see P06-21，factory set：8 Torque limit check output

	output port	
P06-40	Speed analog instruction input gain	Set range：10-2000，Unit 1rpm/V Set the CN1 input between the simulation command and the Speed Control Command Coefficient Example: 500 on behalf of Each v corresponding to 500 RPM
P06-41	Speed analog command filter constant	Set range：0—64.00，Unit ： ms Set the time factor of analog instruction filtering for CN1 input
P06-42	Velocity analog instruction offset	Set range：-10.000—10.000，Unit : V Set The simulated instruction zero offset for CN1 input
P06-43	Torque simulation instruction gain	Set range：0—100.0，Unit 1% Set the coefficient between the analog command input by cN1 and the speed control command For example, 30.0 represents 30% of rated torque per V
P06-44	Torque analog instruction filter constant	Set range：0—64.00，Unit ： ms Set the time factor of analog instruction filtering for CN1 input
P06-45	Torque analog instruction offset	Set range：-10.000—10.000，Unit V Set The simulated instruction zero offset for CN1 input
P06-46	Speed analog instruction dead zone	Set range：0—10.000，Unit V Set the dead time voltage value of the speed analog command. When the analog quantity is set within the range of the positive and negative values, the system will default to zero
P06-47	Torque analog instruction dead zone	Set range：0—10.000，Unit V Set the dead-time voltage value of the torque simulation instruction. When the analog is given in the range of the positive and negative values, the system defaults to zero

8.2.8 P08-xx High function Parameter

Para code	Name	Description

P08-01	Load rotation routine identification mode	Set range：0-1 0：valid 1：invalid
P08-02	Maximum speed of inertia identification	Set range：100-2000，Unit：rpm The maximum speed of the motor in off-line inertia identification
P08-03	Inertia identification acceleration and deceleration time	Set range：20-800，Unit：ms The acceleration and deceleration time of motor when off-line inertia identification
P08-04	Wait time after single inertia identification is completed	Set range：50-10000，Unit ：ms When the moment of inertia identification is off-line, the waiting time after the single moment of inertia identification is completed
P08-05	The number of motor rotations required to complete a single inertia	This parameter is based on P08-02, P08-03, P08-04 set conditions automatically generated the value of the rotation circle
P08-11	Adaptive notch mode selection	Set range：0-4 0: The parameters of the third and fourth notch are no longer automatically updated and are saved to the current value. However, manual input of 1:1 adaptive notch filter is valid, and the parameters of the third notch filter are automatically updated. Manual input of 2:2 adaptive notch filter is valid, and the parameters of the third and fourth notch filters are automatically updated, can Not Manually Input 3: Only Detect Resonance Frequency 4: Clear the third, the fourth notch filter parameters, restore to the factory settings
P08-13	Vibration detection threshold of adaptive notch filter	Set range：0-7 This parameter sets the vibration detection sensitivity of adaptive notch filter, and the smaller the parameter value, the more sensitive the detection sensitivity is

P08-17	Speed monitor	0: TURN OFF Speed Observer 1: TURN ON SPEED OBSERVER 2: Speed, Torque Observer
P08-19	Feedback speed low-pass filter constant	Set range：0-25.00，Unit：ms Feedback speed low-pass filter time constant, when the motor running when there is a howling, the value can be set up properly
P08-20	Torque command filter constant1	Set range：0-25.00，Unit：ms Torque instruction filter time constant 1, when there is a motor running, the value can be appropriately set to large.
P08-21	Torque command filter constant2	Set range：0-25.00，Unit：ms Torque instruction filter time constant 2, when there is a motor running, the value can be set appropriately large.
P08-25	Disturbance torque compensation gain	Set range：0-100.0 Observed Gain Coefficient of disturbing torque. The larger the value is, the stronger the anti-disturbance Torque is, but the action noise may also be increased.
P08-26	Disturbance torque filtering time constant	Set range：0-25.00，Unit：ms The bigger the value is, the stronger the filtering effect is, and the action noise can be suppressed. However, if the disturbance is too large, the phase delay will result and the disturbance torque will be suppressed.
P08-30	Notch Filter 1 frequency	Set Range: Set Range: 300-5000, Unit: HZ Notch 1 center frequency Set to 5000, notch invalid
P08-31	Notch Filter 1 width	Set range：0-20 Set Range: 0-20 Notch 1 notch width level is the ratio of the width to the central frequency
P08-32	Notch Filter 1 depth	Set range：0-99 The notch depth grade of Notch 1 is the ratio between the central frequency input and output of Notch 1. The larger the parameter, the smaller the notch depth and the weaker the effect

P08-33	Notch Filter 2 frequency	same as P08-30
P08-34	Notch Filter 2 width	same asP08-31
P08-35	Notch Filter 2 depth	same asP08-32
P08-36	Notch Filter 3 frequency	same asP08-30
P08-37	Notch Filter 3 width	same asP08-31
P08-38	Notch Filter 3 depth	same asP08-32
P08-39	Notch Filter 4 frequency	same asP08-30
P08-40	Notch Filter 4 width	same asP08-31
P08-41	Notch Filter 4 depth	same asP08-32

8.3 List of surveillance items

Display serial number	Display item	Description	Unit
d00.C.PU	Sum of position instruction pulses	This parameter can monitor the number of pulses sent by the user to the servo driver, which can confirm whether there is the phenomenon of missing pulses	user unit
d01.F.PU	Sum of position feedback pulses	This parameter can monitor the pulse number of servo motor feedback. The unit is consistent with the User Input Instruction Unit	user unit
d02.E.PU	Number of position deviation pulses	This parameter can monitor the pulse number of the position lag in the process of the SERVO system. The unit is consistent with the User Input Instruction Unit	user unit
d03.C.PE	Sum of pulses at a given position	This parameter can monitor the number of pulses sent by the user to the servo drive. Unit: 131072 bit per turn when using absolute value motor. Use Incremental encoder motor, then each turn according to encoder line number * 4 calculate.	Encoder unit
d04.F.PE	Sum of position feedback pulses	This parameter can monitor the pulse number of servo motor feedback. Unit: 131072 bit per turn when using absolute value motor. Use Incremental	Encoder unit

		encoder motor, then each turn according to encoder line number * 4 calculate.	
d05.E.PE	Number of position deviation pulses	This parameter can monitor the pulse number of the position lag in the process of the SERVO system. Unit: 131072 bit per turn when using absolute value motor. Use Incremental encoder motor, then each turn according to encoder line number * 4 calculate.	Encoder unit
d06.C.Fr	Pulse Command input frequency	This parameter can monitor the input frequency of external pulse instruction	KPPS
d07.C.SP	Speed Control Command	This parameter can monitor the servo given speed when the servo motor is running	rpm
d08.F.SP	Motor speed	This parameter can monitor the speed of servo motor when it is running	rpm
d09. C.tQ	Torque instruction	This parameter can monitor the Torque of the servo motor when it is running	%
d10. F.tQ	Feedback value of torque	This parameter can monitor the Torque of the servo motor when it is running	%
d11.AG.L	Average torque	This parameter can monitor the average torque of the servo motor in the past 10 seconds	%
d12.PE.L	Peak torque	This parameter can monitor the peak torque of servo motor after power-on	%
d13.oL	Overload rate	This parameter can monitor the servo motor's load occupancy in the past 10 seconds	%
d14.rG	Regeneration load rate	This parameter monitors the load rate of the regeneration resistor	%
d16.I.Io	Input IO status	This parameter can monitor the input port status of CN1. The upper vertical bar represents the high level (optocoupler cut-off) , the lower vertical bar represents the low level optocoupler on)	Binary system
d17.o.Io	Output IO status	This parameter can monitor the output port status of CN1. The upper vertical bar represents the high level (optocoupler through) , the lower vertical bar represents the low level optocoupler cut-off)	Binary system
d18.AnG	Mechanical angle of	This parameter can monitor the mechanical angle of	0.1 degree

	motor	the motor and rotate 1 turn is 360 degrees	
d19.HAL	Motor UVW phase sequence	This parameter can monitor the phase sequence position of the incremental encoder motor	
d20.ASS	Absolute Value Encoder single-loop value	This parameter can monitor the feedback value of absolute encoder, rotating a circle for 0xffff	Decimal system
d21.ASM	Absolute Value Encoder multi-loop value	This parameter can monitor the number of turns of the absolute encoder motor	
d22.J-L	Moment of inertia ratio	This parameter can monitor the real-time inertia of the load of the motor	%
d23.dcp	Main Circuit Voltage (AC value)	This parameter can monitor the input voltage value of the main circuit	V
d24.Ath	Drive temperature	This parameter can monitor the drive temperature	Degree Centigrade
d25.tiE	Cumulative running time	This parameter monitors the drive elapsed time, in seconds	seconds
d26.1.Fr	Resonance 1	This parameter can monitor resonance frequency 1	Hz
d28.2.Fr	Resonance 2	This parameter can monitor resonance frequency 2	Hz
d30.Ai1	Analog quantity instruction 1 input voltage（V_REF）	This parameter can monitor the input voltage value of CN1 analog command.	0.01V
d31.Ai2	Analog quantity instruction 1 input（T_REF）	This parameter can monitor the input voltage value of CN1 analog command.	0.01V

8.4 Auxiliary function

Serial number	Display item	Function	Operation
1	AF_JoG	JOG trial run	1. Press the M button in the action panel to switch to auxiliary mode AF, operate the Up / Down button to AF, press ENT button to enter the Jog mode of operation. The default Jog speed is 300 RPM. 2. Press the Up button, and the motor turns forward at 300 R / Min; press the Down button, and the motor turns back at 300 R / Min. 3. Long press ENT button to enter the speed edit menu. Edit the speed by using a combination of Up, Down and Left buttons, then

			press ENT for a long time to re enter Jog mode. This setting is not saved after the rollout of Jog mode. 4. Press M to exit Jog mode.
2	AF_run	Force enable operate speed mode	1. Press the M button in the action panel to switch to auxiliary mode AF, operate the Up / Down button to AF, press ENT button to enter the working mode. 2. Press the Up button, the motor is rotating, long press the Up button, the motor speed will continue to increase; press the Down button, the motor reverse, long press the Up button, the motor speed will continue to increase. 3. Press the M button to exit the mode.
3	AF_oF1	Automatic Zero Drift calibration for analog input 1（VCMD）	1. Press the **M** button in the action panel to switch to auxiliary mode **AF_xxx**, press the Up / Down button to **AF_of1**, press **ENT** button to display **clr.Ai1**. 2. Long press ENT key until finsh flicker appears, that is to complete the automatic calibration of analog input 1 zero drift. (speed analog) 3. Press the M button to exit the mode.
4	AF_oF2	Automatic Zero Drift calibration for analog input 2（TCMD）	1.Press the **M** button in the action panel to switch to auxiliary mode **AF_xxx**, press the Up / Down button to **AF_of2**, press **ENT** button to display **clr.Ai1**. 2.Long press **ENT** key until finsh flicker appears, that is to complete the automatic calibration of analog input 1 zero drift.(torque analog) 3. Press the M button to exit the mode.
5	AF_oF3	U, W current Automatic zero drift calibration	Same AF_oF1 Note: when performing this function, the servo must be in the off enable state, otherwise the finsh flashing page will not appear, and the automatic calibration cannot be completed
6	AF_En0	Absolute encoder fault clearing	1. Press the M button in the action panel to switch to auxiliary mode AF, press the Up / Down button to AF, press ENT button to display CLC. Err. 2. Long press ENT button until finsh flashes, that is, complete absolute encoder troubleshooting. 3. Press the M button to exit the mode.
7	AF_En1	Absolute value	1. Press the M button in the action panel to switch to auxiliary mode

		encoder multi-turn value resetting	AF, press the Up / Down button to AF, press ENT button to display CLC. Ash. 2. Long press ENT key until finsh flashes, that is, complete absolute encoder multi-turn value resetting. 3. Press the M button to exit the mode.
8	AF_ini	recover to factory setup	Contact with factory
9	AF_Err	The failure records display	1. Press the M button in the operations panel to switch to auxiliary mode AF, operate the Up / Down button to AF, press ENT button to display the past 8 historical failure information. The left Digit 0 represents the last failure 2. Press the Up button to display the past failures one by one. Long press ENT button, can show the time of failure, time coordinates reference D 25. Tie. 3. Press the M button to exit the mode. Note: A fault that occurs during multiple ups and downs in 30 minutes may have a recording time deviation of 30 minutes.
10	AF_uEr	Version display	1. Press the M button of the operation panel to switch to auxiliary mode AF, operate the Up / Down button to AF, press ENT button to display the SERVO information. 2. Press the M button to exit the mode.
11	AF_unL	Operation Permission Setting	1. Press the M button of the action panel to switch to the auxiliary mode AF, operate the Up / Down button to AF, press the ENT button to edit the action permissions. 0: The parameters are all locked, can not be changed; 1: The P00-XX parameters are locked, other can be changed; 2: No Lock, can be changed. Set 0,1 value, power down to save. Set 2, power off do not save. 2. Press the M button to exit the mode.
12	AF_ Io	Forced output port level	1. Press the M button of the action panel to switch to the auxiliary mode AF, operate the Up / Down button to AF, press the ENT button to edit. 2. Press the M button to exit the mode. The output port reverts to its original output state.
13	AF_J-L	Load inertia ratio measurement	1. Press the M key on the operation panel, switch to the auxiliary mode AF - XXX, operate the up / down key to AF_J-L, and press the ENT key to measure the inertia ratio. 2. Long press up key or down key, the motor will run back and forth

			according to the maximum speed set by p08-02, acceleration and deceleration time set by p08-03, waiting time set by p08-04, and turns set by p08-05 until the load inertia ratio appears. 3. Press the M key to exit the mode. 4. Record the measured value and write it into p01-04 (moment of inertia ratio) parameter

Chapter 9 Fault Analysis and Treatment

9.1 Failure alarm information list

Alarm Type	Alarm Code	Alarm content
Hardware Fault	AL.051	Eeprom parameter abnormal
	AL.052	Programmable Logic configuration fault
	AL.053	Initialization Failed
	AL.054	System abnormal
	AL.060	Product model Select fault
	AL.061	Product matching fault
	AL.062	Parameter storage fault
	AL.063	over current checkout
	AL.064	Servo power on ， Self-Test find out the output short circuit fault
	AL.065	servo unit built-in Fan stop
	AL.066	servo unit control power supply low voltage
	AL.070	AD Sample fault1
	AL.071	Current sample fault
	AL.100	Parametric combination abnormal
	AL.101	AI Setting fault
	AL.102	DI distributing fault
	AL.105	Electronic gear Configuration error
	AL.106	Frequency splitting pulse output Setting abnormal
	AL.110	Need to power-on again after the parameter setting
	AL.120	Servo ON Instruction invalid
Operational Faults	AL.401	Under voltage
	AL.402	Over voltage
	AL.410	Overload (instantaneous Maximum load)
	AL.411	Drive overload
	AL.412	Motor overload（Continuous maximum load）
	AL.420	Over speed
	AL.421	Lose Control check out
	AL.422	runaway fault
	AL.423	Inconsistent speed alarm

Operational Faults	AL.425	AI collect sample over voltage
	AL.430	Regeneration of Abnormal
	AL.431	Regeneration of overload
	AL.432	Regeneration of Short circuit Open circuit
	AL.435	Stroke current Limited overload resistance
	AL.436	DB overload
	AL.440	Radiator overheat
	AL.441	Motor overheat fault
	AL.500	Output frequency division over speed
	AL.501	Position deviation is too large
	AL.502	Full closed loop encoder position and Motor position error are too large
	AL.505	Pulse Command input pulse abnormal
	AL.510	Gantry synchronization deviation deviation is large
	AL.550	Inertia identification failure fault
	AL.551	back to origin Point timeout fault
	AL.552	Angle Identification failure fault
Encoder Fault	AL.600	Encoder output power short circuit fault
	AL.610	Incremental encoder gets out of line
	AL.611	Incremental encoder Z signal loss
	AL.620	Absolute Encoder gets out of line
	AL.621	Read and write motor encoder EEPROM parameter abnormal
	AL.622	motor encoder EEPROM data parity error
	AL.640	Absolute encoder overspeed
	AL.641	Absolute encoder overheat
	AL.643	Absolute encoder Battery low voltage fault
	AL.644	Absolute encoder multi-turn fault
	AL.645	Absolute encoder multi-turn overflow fault
	AL.646	Absolute encoder communication error 1
	AL.647	Absolute encoder count error 2
	AL.648	Absolute encoder communication error 3
	AL.649	Absolute encoder communication error 4
	AL.650	Absolute encoder communication error 5
	AL.651	Absolute encoder communication error 6
	AL.652	Absolute encoder multi-turn Multiple faults

Warning	AL.900	Location deviation is too large
	AL.901	When servo ON, Location deviation is too large
	AL.910	Motor overload
	AL.912	Drive overload
	AL.920	Regeneration of overload
	AL.921	DB overload
	AL.925	External regeneration bleeder resistor is too small
	AL.930	Absolute encoder’s battery Fault
	AL.941	Need to power-on again after Parameters changing
	AL.942	Write EEPROM frequent warnings
	AL.943	Abnormal serial communication
	AL.950	Over run Warning
	AL.951	Absolute encoder angle initialization warning
	AL.971	Under voltage warning
	AL.990	Radiator overheat warning
	AL.991	Input phase loss warning

9.2 Cause and treatment of fault alarm

AL.051：EEPROM parameter abnormal

Causes of fault alarm	Fault alarm checking	Disposal measures
servo unit EEPROM data abnormal	Check connection	Correct connection，reconnect power, If always appear, then change a drive

AL.052：Programmable logical configuration fault

Causes of fault alarm	Fault alarm checking	Disposal measures
Master control MCU power-on initialization exception, Serial port baud rate setting is too high	Check connections, Check the baud rate of serial communication parameters P00-21	Reduce the baud rate of Serial Communication, If always appear, then change a drive

AL.053：Initialization Failed

Causes of fault alarm	Fault alarm checking	Disposal measures
Master control MCU power-on initialization failed	check connections reconnect power	If always appear, then change a drive

AL.054：System error

Causes of fault alarm	Fault alarm checking	Disposal measures
Master control MCU operation abnormal	check connections reconnect power	If always appear, then change a drive

AL.060：Product model selection fault

Causes of fault alarm	Fault alarm checking	Disposal measures
Product parameter setting does not match the actual hardware	Detect whether the servo unit can support the mtor	Set product parameters correctly If always appear, then contact the manufacturer
The drive power does not match the motor power	The rated current of the selected motor is greater than or much less than the output current of the driver	Use the matching motor and driver units

AL.061：Products matching fault

Causes of fault alarm	Fault alarm checking	Disposal measures
servo unit and servo motor does not match	Detect whether the servo unit can support the motor	Replace the matching motor and servo units

AL.063：Overcurrent detection

Causes of fault alarm	Fault alarm checking	Disposal measures
Short circuit between U,V and W	U,V,W wiring whether is short circuit	Correct connection，If always appear, then change a drive
Drive damage	Disconnect the U,V, and W connections on the drive enabling the drive	If the connection of U,V and W is disconnected and the start driver still alarms, the driver will be replaced

AL.066：Servo Unit controls the power supply voltage is low

Causes of fault alarm	Fault alarm checking	Disposal measures
Control power supply L,N power voltage is too low	check connections Measure L, N , whether the voltage is lower than 140VAC	Correct connection，If always appear, then change a drive

AL.071：Current collect sample fault

Causes of fault alarm	Fault alarm checking	Disposal measures
abnormal collect sample data in current sensor	check connections whether is correct	Correct connection，If always appear, then change a drive

AL.100：Parameter combination anomaly

Causes of fault alarm	Fault alarm checking	Disposal measures
Parameter setting error	Check the set (p03-07) parameters	Set parameters correctly If it always appears, initialize the parameter

AL.102：DI distribution fault

Causes of fault alarm	Fault alarm checking	Disposal measures
Set parameters correctly At least two input ports have the same selection of functionality	Check input port function selection parameters (p06-01, p06-03, p06-05...)	Set parameters correctly The drive is recharged

AL.105：Electronic gear setting error

Causes of fault alarm	Fault alarm checking	Disposal measures
Electronic gear ratio setting error	Check electronic gear ratio setting parameters.P03-10, P03-11	Set the electronic gear ratio correctly
Gantry output pulse set too small	Check the feedback pulse number of the gantry motor for one turn: p03-52 must be greater than 128	Set the feedback pulse number of the gantry motor for one turn

AL.106：Frequency division pulse output setting is abnormal

Causes of fault alarm	Fault alarm checking	Disposal measures
The output parameters of frequency division pulse are set out of range	Check the setting parameters of frequency division pulse output. P03-22, p03-23, p03-25	Set the output parameters of frequency division pulse correctly Incremental encoder p03-22 ≤ p03-23 Bus encoder p03-25 <65535 The drive is recharged

AL.110：The power should be recharged after the parameters are set

Causes of fault alarm	Fault alarm checking	Disposal measures
After setting the servo	The drive is recharged	The drive is recharged

parameters, it shall be powered on again to take effect		

AL.120：Servo ON command invalid alarm

Causes of fault alarm	Fault alarm checking	Disposal measures
When the servo is ON, the power supply input ports R, S and T are not powered	Check wiring and input voltage	Check wiring and input voltage

AL.401：Under voltage

Causes of fault alarm	Fault alarm checking	Disposal measures
Main circuit input voltage lower than rated voltage value or no input voltage	Check whether the input R,S and T of the main circuit is correct and what the voltage value is. The bus voltage can be monitored through d23.dcp	Ensure proper wiring, use correct voltage source or series regulator

AL.402 Over voltage

Causes of fault alarm	Fault alarm checking	Disposal measures
The input voltage of the main circuit is higher than the rated voltage	Test the input voltage of the main circuit with a voltmeter	Use the correct voltage source or tandem regulator
Driver hardware failure	When the input voltage is confirmed to be correct, the overvoltage alarm still remains	Please send it back to distributor or original factory for maintenance
No regenerated resistance or regenerated resistance is not selected correctly	Verify that p00-30 is set to 0 or 1	Correct setting and external regenerative resistance

AL.410：Overload (instantaneous maximum load)

Causes of fault alarm	Fault alarm checking	Disposal measures
The machine is stuck when the motor starts	Check if mechanical connection is jammed	Adjusting mechanical structure
Driver hardware failure	Confirm that the mechanical part is still alarming normally	Please send it back to distributor or original factory for maintenanc

AL.412：Motor overload (continuous maximum load)

Causes of fault alarm	Fault alarm checking	Disposal measures

Continuous use beyond the rated load of the drive	Monitoring can be done through d13.ol. In monitoring mode	Switch to a higher power motor or lower load
Improper parameter setting of control system	1. Whether the mechanical system is installed 2. Set the acceleration constant too fast 3. Whether the parameters of gain class are set correctly	1. Adjust the gain of the control loop 2. Acceleration and deceleration setting time slows down
Motor connection error	Check U, V and W wiring	Correct connection

AL.420 Over speed

Causes of fault alarm	Fault alarm checking	Disposal measures
Input speed command too high	Use the signal detector to check if the incoming signal is normal	Adjust the frequency of the input signal
Incorrect setting of overspeed judgment parameters	Test whether p04-05 (overspeed alarm value) is set reasonably	Set p04-05 (overspeed alarm value) correctly

AL.421：Out of control check out

Causes of fault alarm	Fault alarm checking	Disposal measures
Motor power line U,V,W wiring error	Check the connection and adjust the frequency of the input signal	Correct connection
Motor parameters are not set correctly	Check P00-05;And encoder parameter setting is correct or not	Set parameters correctl In torque mode, set p01-40 to 0 to turn off the out-of-control check out function

AL.423 Inconsistent speed alarm

Causes of fault alarm	Fault alarm checking	Disposal measures
Motor power line U,V,W wiring error	Check the wiring	correct the wiring
Motor parameters are not set correctly	Check whether p00-46 / p04-12 Settings are reasonable	set parameters correctly

AL.430：Abnormal regeneration

Causes of fault alarm	Fault alarm checking	Disposal measures
The regenerative resistance is	Check the connection status of the	If the connection is normal, please

wrong or not connected to the external regenerative resistance	regenerated resistance	return the drive to the factory for maintenance
Parameter setting error	Please confirm the parameter Settings for p00-30, p00-31 and p00-32	Set parameter values correctly

AL.431：Regeneration of overload

Causes of fault alarm	Fault alarm checking	Disposal measures
The regenerative resistance is wrong or not connected to the external regenerative resistance	Check the connection status of the regenerated resistance and whether the regenerated resistance value and power are suitable	Select the appropriate regenerative resistance

AL.432：Regenerative short circuit, open circuit

Causes of fault alarm	Fault alarm checking	Disposal measures
Regenerative short circuit	Check port B1/B3 for short circuit	If there is no short circuit in B1/B3 and the alarm still appears, please return the driver to the factory for maintenance
Regenerative open circuit	Please confirm the parameter Settings for p00-30, p00-31 and p00-32	Set parameter values correctly

AL.440：Radiator overheating

Causes of fault alarm	Fault alarm checking	Disposal measures
The internal temperature of the drive is above 95℃	Check whether the heat dissipation condition of the drive is good	Improve the heat dissipation condition of the drive. If the alarm still appears, please return the drive to the factory for maintenance

AL.501：Excessive position deviation

Causes of fault alarm	Fault alarm checking	Disposal measures
Position deviation is too large and parameter setting is too small	Confirm p03-15 (position deviation is too large) parameter setting	Increase the set value of p03-15 (position deviation is too large)
The gain value is set too low	Confirm whether the gain class parameters are properly set	Re-adjust the gain class parameters correctly

Internal torque limiter is set too small	Confirm internal torque limiter	Re-adjust the internal torque limiter correctly
Excessive external load	Check external load	Load reduction or high power motor replacement

AL.505：P Command input pulse exception

Causes of fault alarm	Fault alarm checking	Disposal measures
The pulse command frequency is higher than the rated input frequency	Use the pulse frequency meter to detect if the input frequency is higher than the rated input frequency	Set the input pulse frequency correctly

AL.551：Back to the origin timeout failure

Causes of fault alarm	Fault alarm checking	Disposal measures
The operation back to the origin is timed out	Confirm whether the parameter p03-68 (maximum time limit for searching origin) is reasonable	Set p03-68 correctly

AL.600：Short circuit fault of encoder output power supply

Causes of fault alarm	Fault alarm checking	Disposal measures
Encoder power connection error	Check whether the encoder power supply +5V and GND are connected in reverse	Correct connection

AL.610：Delta encoder off-line

Causes of fault alarm	Fault alarm checking	Disposal measures
Delta encoder HallU, HallV, HallW signal exception	Check the encoder wiring	Correct connection

AL.620：Bus encoder off line

Causes of fault alarm	Fault alarm checking	Disposal measures
Bus encoder communication failed	Check the encoder wiring	Correct connection

AL.621：Read/write motor encoder EEPROM parameters are abnormal

Causes of fault alarm	Fault alarm checking	Disposal measures
Encoder read and write exception	Check the encoder wiring，	Correct connection

AL.640：Bus encoder overspeed

Causes of fault alarm	Fault alarm checking	Disposal measures
Bus encoder speed value is more than 6000rpm	Check the encoder wiring Make sure the encoder shield wire is properly connected	Reduce the speed If the connection is normal, please return the drive to the factory for maintenance

AL.643：Bus encoder battery failure

Causes of fault alarm	Fault alarm checking	Disposal measures
When the bus encoder is set to multi-coil absolute value, the external battery voltage is low	Check the external battery voltage of the encoder and confirm that it is higher than 3.0v	When the battery voltage is lower than 3.0V, replace the battery, For higher than 3V, use the auxiliary function AF_En0 to clear the alarm

AL.645：ModBus encoder multi-loop overflow fault

Causes of fault alarm	Fault alarm checking	Disposal measures
The number of turns of the bus encoder is out of range	The winding number can be monitored through the monitoring mode d21.ash. The multi-turn absolute motor cannot turn in one direction for a long time.	Clear multiple values using the directive AF_En1

AL.647：Bus-type encoder counts exceptions

Causes of fault alarm	Fault alarm checking	Disposal measures
Split-type encoder installation position deviation is large	Check the encoder	Install the encoder correctly

AL.930：Absolute value encoder battery failure

Causes of fault alarm	Fault alarm checking	Disposal measures
Absolute value encoder battery	Check the external battery voltage	The battery voltage is lower than

failure	of the encoder and confirm that it is higher than 3.0v	3.0v. Replace the battery Use the command AF_En0 to clear the alarm when it is higher

AL.941：Parameter change requires power outage and restart to take effect

Causes of fault alarm	Fault alarm checking	Disposal measures
After modifying the parameters, the parameters shall take effect after repowering		Power to restart

AL943：Abnormal serial communication

Causes of fault alarm	Fault alarm checking	Disposal measures
Serial communication interference The serial port baud rate is set too high	Check the wiring Check the baud rate parameter p00-21 for serial communication	Add a filter to the wire Reduce the baud rate of serial communication

Chapter 10 Communication Settings

10.1 Modbus communication parameter setting

Para Code	Name	Description
P00-23	Slave address	setting range: 0-255, default 1 Set according to the equipment requirements
P00-24	Modbus communication baud rate	setting range: 0-7, default 2 0：2400 1：4800 5：57600 2：9600 6：115200 3：19200 7：25600 4：38400

P00-25	check mode	setting range: 0-3, default 1 0: no parity, 2 stop bits 1: even parity, 1 stop bit 2: odd parity, 1 stop bit 3: no parity, 1 stop bit
P00-26	Modbus Communication response delay	Setting range: 0-100, default 0 When the parameter is set to 0, the response is conducted according to the standard communication. When the parameter is set to value, the response time of Modbus communication is conducted according to the set time

10.2 Modbus communication support read and write parameter settings

Supports writing to parameter lists

Address / Parameter number	Address decimail	address Hexadecimal	address Octanory	Remark
P03-09	309	135	465	Number of command pulses for motor rotation
P03-10	310	136	466	Electronic gear molecules
P03-11	311	137	467	The electronic gear denominator
P05-03	280	118	430	The digital torque is given
P05-02	366	16E	556	Torque mode speed limiter given value
Eeprom data	2050	802	4002	data to be written
Eeprom control	2051	803	4003	Address: 0-11bit 12 bit for 1 when the

				write operation The first 13 bits are 1 for the read operation

Note: the above written parameters are only temporarily modified and will not be saved after power failure

Support for reading parameter lists

Address / Parameter number	Address decimail	Address Hexadecima	Address Octanory	Remark
P03-09	309	135	465	Number of command pulses for motor rotation
P03-10	310	136	466	Electronic gear molecules
P03-11	311	137	467	The electronic gear denominator
P03-12	312	138	470	High position of electronic gears
Eeprom reads data	2050	802	4002	read data
Eeprom reads address	2051	803	4003	data corresponding to address
Position reference	2106/2107	83A/83B	4072/4073	Address 2106 is 16 bits high Address 2107 is the lower 16 bits
Position feedback value	2108/2109	83C/83D	4074/4075	Address 2108 is the upper 16 bits Address 2109 is the lower 16 bits
Position deviation value	2110/2111	83E/83F	4076/4077	Address 2110 is the upper 16 bits Address 2111 is the lower 16 bits
Speed control command	2113	841	4101	Umin：1rpm/min
Motor running speed	2114	842	4102	Unit: 1rpm / min
Torque command	2115	843	4103	Unit: 0.1%
Torque feedback value	2116	844	4104	Unit: 0.1%
Overload load	2117	845	4105	Unit: 0.1%

rate				
Peak Torque	2118	846	4106	Unit: 0.1%
Regeneration overload rate	2120	848	4110	Unit: 0.1%
Port status	2121	849	4111	read into the value, converted to 16-bit binary: low 8 for the input port state, the middle 5-bit for the output port state, high 3-bit HAL state
Motor mechanical angle	2123	84B	4113	Unit: 0.1 degree
Position feedback value (Absolute Data)	2125/2126	84D/84E	4115/4116	Front High Low: High for laps Low for lap, 65536BIT per turn
Main circuit voltage	2128	850	4120	Unit:V
Speed loop analog voltage value	2133	855	4125	Unit:0.01V
Torque loop analog voltage value	2134	856	4126	Unit:0.01V

External command digital reference list

Instruction address / **Control mode**	address Decimal	address Hexadecimal	address Octanory	Renark
Position loop digital given	2003/2004	7D3/7D4	3723/3724	maximum support 2 ^ 32 digital reference Decimal value 131072 = 1 turn
Speed loop digital reference	2002	7D2	3722	speed (rpm) = 10 decimal value / 5
Torque ring digital	280	118	430	Torque = decimal value %

quantity is given				
Torque ring speed digital quantity is given	366	16E	556	Rotational speed (RPM) = base 10 value

Chapter 11 Special Function Instructions

11.1 Absolute encoder is used

11.1.1 Functional description

Using the servo motor with the absolute value encoder, the absolute value detection system can be built by the upper device. Through the absolute value of the detection system, you do not have to reset the origin every time the power supply. This function is based on MODBUS communication to read the absolute encoder winding number and position data, and the upper device processes and controls the absolute encoder related functions.

11.1.2 Based on MODBUS communication servo basic Settings and instructions.

When the system using absolute value encoder is put into use, it needs to initialize the rotation number data (af-en1 absolute value encoder multi-turn value zeroing).Thus, an alarm related to the absolute value encoder occurs when initialization is required, such as first switching on the power.By setting (initializing) the absolute value encoder, the alarm associated with the absolute value encoder is cleared after initializing the number of turns.

Para Code	Name	Description
P00-23	From the station address	Set range: 0-255, default 1 Set according to equipment requirements
P00-24	Modbus Communication baud rate	Set range: 0-7, default 20：2400 1：4800 2：9600 3：19200 4：38400

		5：57600 6：115200 7：25600
P00-25	Check way	Set range: 0-3, default 0 0: no check, 2 stop bits 1: parity, 1 stop bit 2: odd check, 1 stop bit 3: no check, 1 stop bit
P00-29	Modbus Absolute encoder feedback format	Set range: 0-1, default 0, Read the absolute position value 84D/84E through 485 0:84d is the value of the circle, and 84E is the value of the single circle 1:84d is the value of a single turn, and 84E is the value of a turn

11.1.3 Based on MODBUS communication absolute data address

Address / Parameter number	Address: Decimal	address Hexadecimal	address: Octal notes	Remark
Position feedback value (Absolute Data)	2125/2126	84D/84E	4115/4116	Front High Low: High Turn Low for lap, 65536BIT per turn 36BIT

11.1.4 Absolute encoder related alarm processing

Alarm code	Fault alarm cause	Fault alarm check	The disposal measures
AL.640	Bus Encoder Overspeed	Initial use occurs	by AF-EN0 (see chapter 8.4) Clear alarm
AL.643	When the bus	Check the encoder	clear the alarm via

	encoder is set to multi-turn absolute value, the external battery voltage is low	external battery voltage, confirm that the battery is replaced by more than 3.0V	AF-EN0 (see chapter 8.4)
AL.644 AL.645	Read multi-turn data abnormality, or multi-turn data greater than 32767	Check d21.ASH (see chapter 8.3) Multi-turn values If the multi-turn value is greater than 32767	clear the multi-turn data by AF-EN1 (see chapter 8.4)
AL.930	Absolute Encoder Battery Fault	Check Encoder External Battery Voltage Replace the battery	clear the alarm via AF-EN0 (see Chapter 8.4)

11.1.5 Absolute encoder battery replacement

In case of any of the following drivers, please replace the battery to avoid loss of absolute position data.

1. When the drive displays AL.930, it represents the battery voltage depression warning. The battery must be replaced in time to avoid the loss of the motor's absolute position data

2. When the drive displays AL.643, it indicates the low battery voltage alarm. When the alarm occurs, the motor winding number data cannot be recorded normally, so the battery must be replaced immediately. After the battery is replaced, the auxiliary function af-en0 shall be used to alarm and clear after the battery is replaced, and the origin of the equipment shall be checked at the same time. At the same time, the auxiliary function is used to reset the multi-turn data of the motor

Note: it is recommended to replace the battery when the drive is energized to avoid the loss of absolute position data